CONTENTS

SUBJECT	PAGE
GENERAL DESCRIPTION	149
Sealing and Cementing	150
MAINTENANCE	151
BODY MOUNTINGS	151
GLASS REPLACEMENT	151
Windshield	151
Rear Glass	153
Rear Quarter Window	153
Door Window	154
Door Stationary Ventilator Glass	155
Ventilator Glass	155
DOORS	155
Door Trim	156
Door Lock and Control Handles	156
Door Window Regulator	157
Door Check	157
Door Window Frame	158
Door Ventilator Parts	158
Door Weatherstrip	159
Door Lock Striker	159
Door Replacement	159
Door Adjustments	159
REAR FENDER REPLACEMENT	161
REAR DECK LID	161
Deck Lid Lock Striker	162
Deck Lid Weatherstrip	162
Deck Lid Replacement	162
Deck Lid Adjustment	162
INTERIOR TRIM AND SEATS	162
Seats	162
Trim Panels	163
Headlining	164
Instrument Panel Cover	164
Care of Upholstery	164
FRONT END SHEET METAL	165
Hood	165
Front Fenders and Splash Shields	166
Grille	166
Bumpers and Supports	167

GENERAL DESCRIPTION

The Henry J all steel basic body construction (Fig. 224) consists of floor pan, rocker panels, cowl and instrument panel, rear quarter panels and roof panel all welded together to form one rigid unit. Rear fenders are bolted to the rear quarter panels for easy replacement in case of damage.

Doors are mounted on hinges to the sturdy cowl side panel and are adjustable at the hinges to obtain a good fit and easy closing action. A sponge rubber weatherstrip extends completely around the door and is compressed between the door and the body to form an effective seal when the door is closed. A rotating toggle type door lock is actuated by either the conventional inside handle or the push-button outside handle. Both doors, when closed, can be locked from the inside by rotating the inside handles forward. The right hand door can also be locked or unlocked from the outside by using the ignition key in the lock cylinder located in the outside handle push button.

Henry J vehicles are manufactured both with and without a rear deck lid. On bodies with a deck lid, a pop-up type latch is used to hold the lid in a closed position. A telescopic prop is used to hold the lid in the open position. The lid is adjustable in the opening by changing its position at the two hinges. On bodies, without a deck lid, a folding rear seat is installed which can be swung down to form a large luggage area

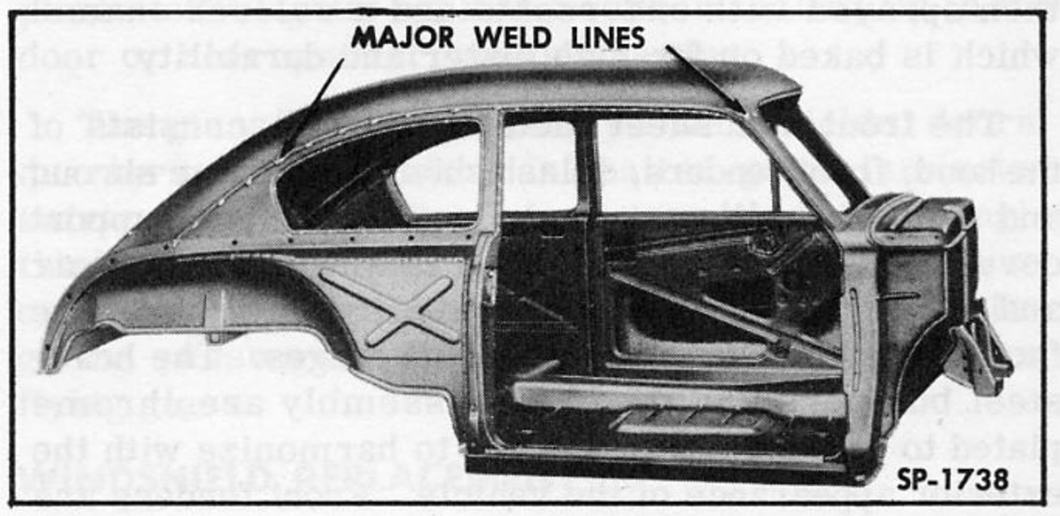

Fig. 224—Basic Body Structure

in the rear compartment. The spare tire is easily accessible with the rear seat folded down.

Large window area for excellent visibility is obtained through the use of extra deep windshield and side windows. The door windows can be raised and lowered with a crank type regulator. Both doors have a stationary ventilator glass as standard equipment. Movable, friction type ventilators are available for the doors and the rear quarter windows as special equipment.

The adjustable front seat is constructed with full size zig-zag type springs. The split front seat backs tilt forward and inward to allow easy entrance into the rear seat compartment. Rear seats are coil spring construction. The seats are covered with a durable fabric which harmonizes with the door and quarter trim panels.

The body is carefully sealed against entrance of dust, water and air. It is insulated on the roof panel, doors, quarters, deck lids, dash and floor pan against heat and sound.(Fig. 225).

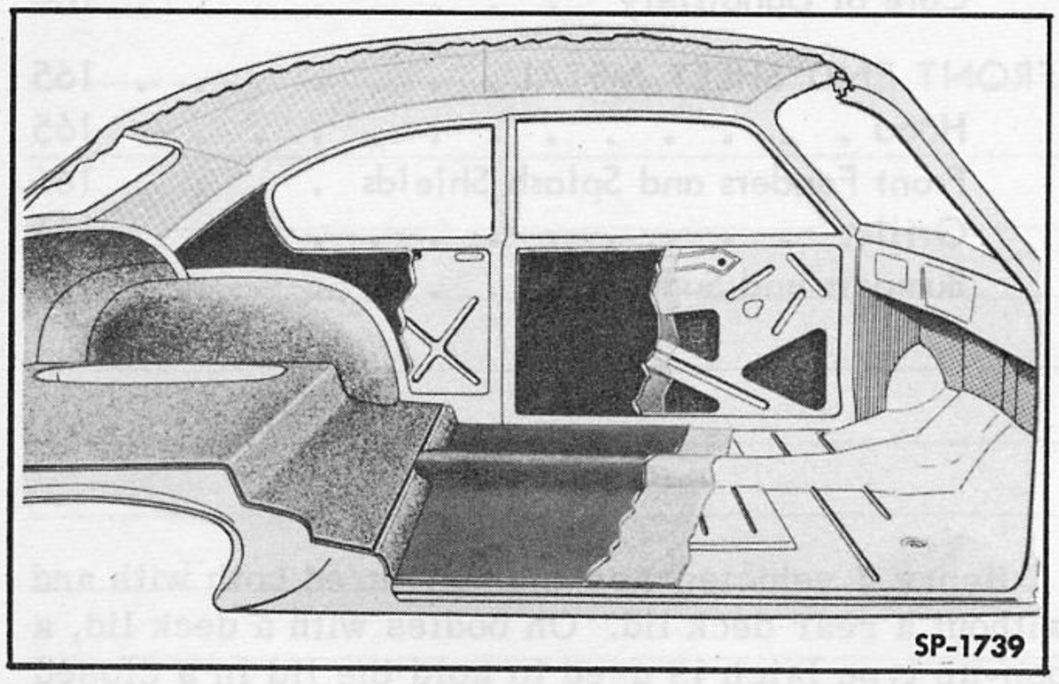

Fig. 225—Typical Body Insulation

A phosphate coating is applied to the body metal, after it is cleaned, to provide a good bonding surface for the undercoats and to retard the spread of rust in case the finish is scratched or chipped. The body is then sprayed with undercoats and a colored enamel which is baked on for high luster and durability.

The front end sheet metal (Fig. 226) consists of the hood, front fenders, splash shields, radiator shroud and support, grille, stone deflector, bumper support covers and bumper. The hood is hinged at the rear and is locked by a hand operated hood latch at the front. The hood is adjustable at its hinges. The heavy steel bumpers and the grille assembly are chrome plated to prevent corrosion and to harmonize with the exterior appearance of the vehicle. Front fenders are easily removed from the cowl and radiator support for replacement. The splash shields extend from the front

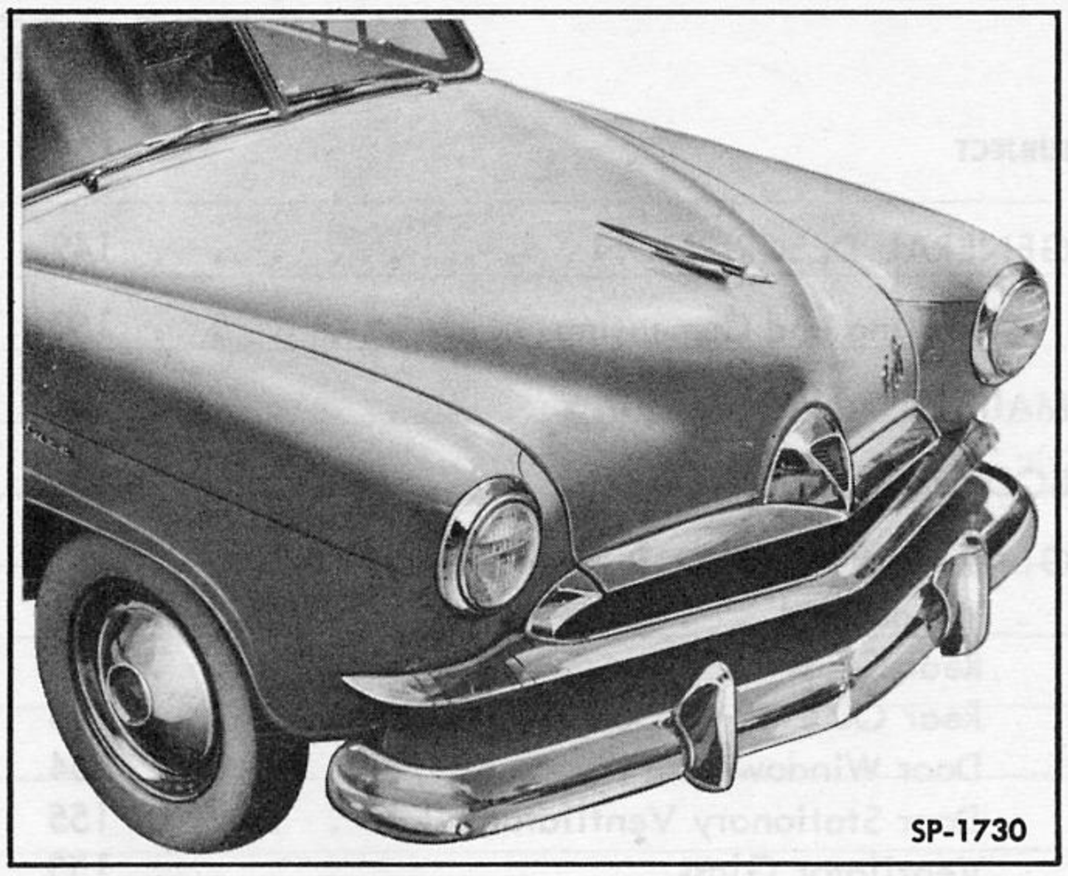

Fig. 226—Front End Sheet Metal

fenders to the frame to prevent water and dirt from splashing into the engine compartment. The left hand splash shield has a removable cover for easy access to the tappet chamber.

SEALING AND CEMENTING MATERIALS

When servicing the body, it is necessary to perform the sealing operations specified in this section with the type of material that is also specified in order to obtain the most satisfactory results.

Many satisfactory materials are on the market, some of which are given below under the general name which will be referred to hereafter:

a. Weatherstrip Cement

Weatherstrip cement is a thin, flowing type cement that dries hard after applying with a brush or an oiler. Its major use is for attaching door and deck lid weatherstrips and for cementing windshields and rear windows to their respective weatherstrips. Some common weatherstrip cements are: 3-M Weatherstrip Adhesive (Minnesota Mining and Manufacturing Co.), Rubber-Seal Mastic (Rubber-Seal Products), and Super Seal Adhesive (Super Seal Products).

b. Trim Cement

Trim cement is a thin, fast drying cement that is easily applied with a brush. Its principal use is for cementing fabric materials to other fabric or to metal. Some typical materials are: 3-M Trim Cement (Minnesota Mining and Manufacturing Co.), Rubber-Seal Mastic (Rubber-Seal Products) and Super Seal Adhesive (Super Seal Products).

c. Body Sealer

Body sealer is a heavy paste type material that retains its elasticity. It is usually applied with a putty knife or caulking gun to seal over metal panel joints and between windshield and rear window weatherstrips and the body. It is ideally suited for such locations because body movement will not cause it to break loose or crack open. Some materials of this type are: 3-M Autobody Sealer (Minnesota Mining and Manufacturing Co.), RS-11 Caulk Gun Body Sealer (Rubber-Seal Products) and C1012 Rubber Base Body Sealer (Super Seal Products).

d. Caulking Compound

Caulking compound for automobile sealing is a putty type material that is usually applied with the fingers. It is somewhat harder than body sealer and can be used for filling larger openings and for pressing into seams. It can be smoothed out and painted over when used where it will be visible. Some caulking compounds readily available are: 3-M Body Caulking Compound (Minnesota Mining and Manufacturing Co.), C1010 Body Putty (Super Seal Products), and Prestite Cord available in 80 foot lengths under service part No. 100117

e. Waterproof Tape

A heavy, cloth backed waterproof tape is used for sealing holes in areas where water may come in contact with the tape. Two such waterproof tapes are: Mystik Tape, available in 60 yard rolls (4 inches wide) under service part no. 213017, and Polykem Tape (Bauer and Black Co.).

MAINTENANCE

A periodic inspection of the body is recommended to assure that attaching bolts and screws throughout the body are properly tightened. At the first sign of water-leaks, squeaks, rattles, hard closing doors or misaligned panels, prompt attention will usually prevent more serious developments.

The interior and exterior should be properly cleaned whenever dirt accumulates. Under normal circumstances, brushing the trim and washing the vehicle once a week will be satisfactory. Whenever the exterior finish becomes dull or chalked to the point where washing does not restore its luster, the finish should be polished with a reliable material such as "Lustur-Seal."

In sections of the country where salt is used on the streets to melt ice, and in areas near the ocean, it is essential to keep the exterior chrome parts clean and free from rust. An application of oil, wax or some other suitable material is very effective in preventing rust on chrome plated parts.

BODY MOUNTINGS

Fourteen body bolts (Fig. 227) are used to attach the rigidly reinforced floor pan and body bracing to the frame which is equipped with speed nuts. The body is insulated from the frame at each attaching location by rubber shims between the frame and the body. Body bolts are tightened to 200-250 inch-pounds torque except the bolts at the front body brace which should be 75-85 inch-pounds.

Care must be taken when selecting thickness of shims for body mountings, as improper shimming will cause improper door fits. For details on this matter, refer to "Door Adjustments" in this section.

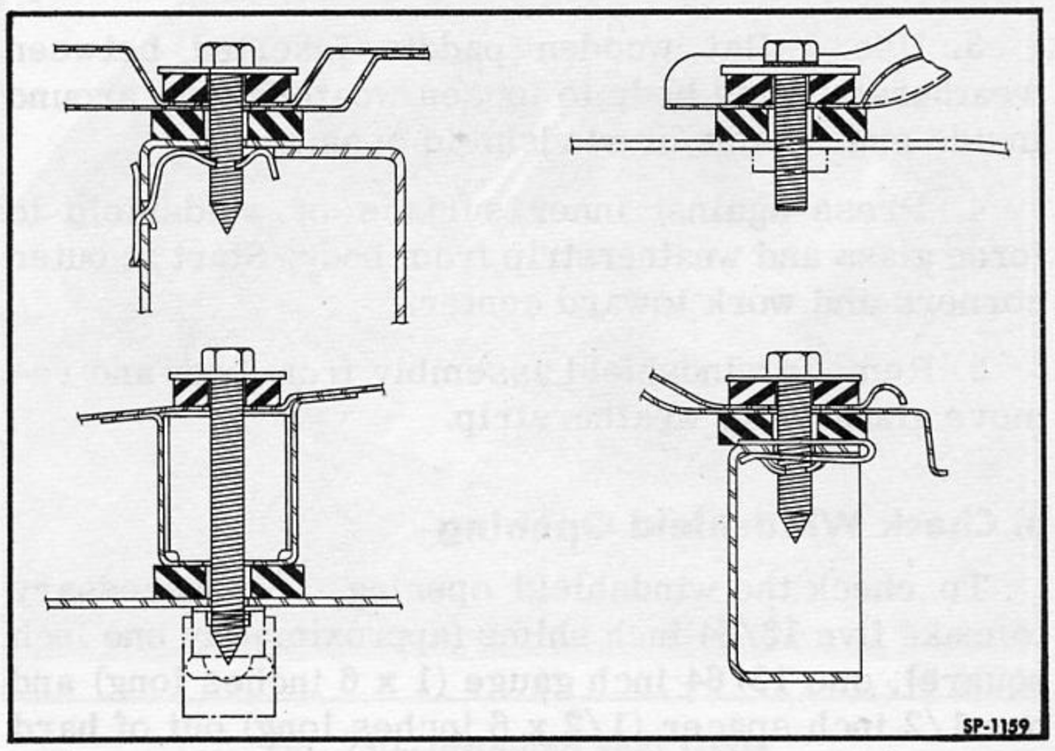

Fig. 227—Sectional Views of Body Mountings

GLASS REPLACEMENT

The windshield, rear glass, rear quarter window and stationary door ventilator are all mounted in rubber channels to form a positive weatherseal at these areas. The movable door window runs in a narrow, fabric lined channel mounted to the door. The special equipment type door and rear quarter ventilator glasses are mounted in a chrome channel which pivots to fit tightly against a rubber sealing lip in the door or rear quarter window opening.

The glass used in all Henry J windshields, doors, quarters and ventilators is shatter-proof laminated safety glass while the curved rear glass is a single thickness, tempered glass which will crumble or crystalize rather than splinter when it is broken, thus giving passengers the utmost in protection against flying glass.

WINDSHIELD REPLACEMENT

When replacing either or both sections of the windshield, it is recommended that the entire windshield

be removed and installed as a complete unit. If the cause of the damaged glass is not known, the windshield opening must be checked and corrected if necessary before a new glass is installed.

a. Windshield Removal

Remove the complete windshield as follows:

1. Remove windshield wiper arms and blades and mask off instrument panel and windshield frame to prevent scratches on the finished surfaces.

2. On bodies with reveal moldings, remove inner and outer division bars and carefully remove reveal moulding from side where glass is to be replaced by pulling flange of moulding from groove in weatherstrip.

3. Use a flat wooden paddle inserted between weatherstrip and body to loosen weatherstrip around inside and outside of windshield opening.

4. Press against inner surface of windshield to force glass and weatherstrip from body. Start at outer corners and work toward center.

5. Remove windshield assembly from body and remove glass from weatherstrip.

b. Check Windshield Opening

To check the windshield opening, it is necessary to make five 13/64 inch shims (approximately one inch square), one 13/64 inch gauge (1 x 6 inches long) and one 1/2 inch spacer (1/2 x 6 inches long) out of hard wood or plastic. Use these pieces and the new windshield glass that is to be installed in the vehicle to check the windshield opening in the following manner:

1. Visually check the pinch weld flange around the opening. If a wavy condition exists, straighten the pinch weld flange by tapping it on one side with a hammer while holding a block against the opposite side.

2. Place the two pieces of windshield glass in the windshield opening with the shims and spacer as shown in Fig. 228. Move windshield glasses to the left side of the vehicle (against shim and spacer) as far as possible. NOTE: Make sure the shims are not resting on any high spots.

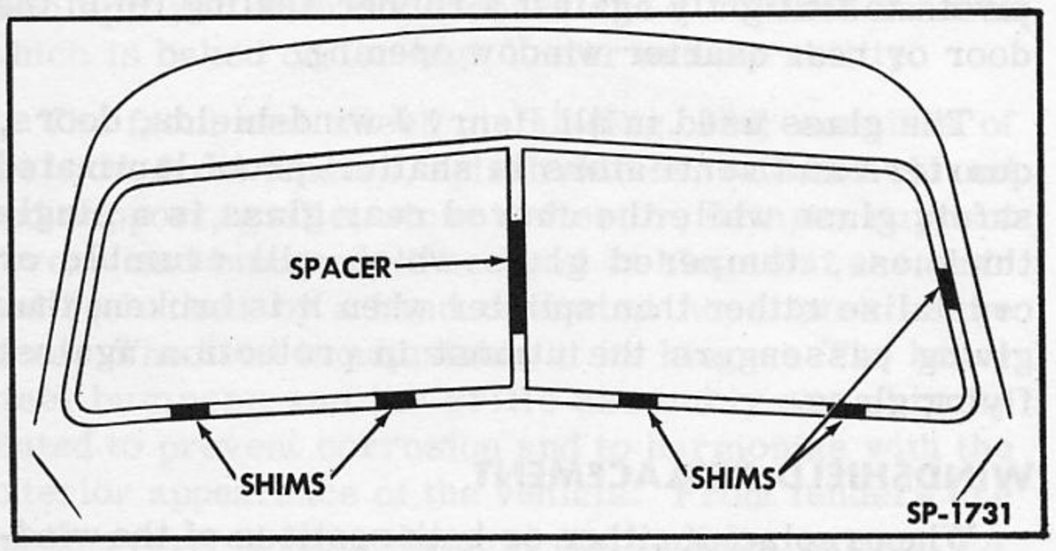

Fig. 228—Checking Windshield Opening

3. Slide the gauge all the way around edges of both glasses. If gauge binds, windshield opening must be reworked to obtain sufficient clearance.

c. Windshield Installation

Install the windshield as follows:

1. Install both windshield glasses to the rubber channel.

2. Apply weatherstrip cement between windshield glasses and rubber channel to seal outside joint. Use an oiler gun if available to apply cement.

3. If so equipped, install reveal mouldings and inner and outer division bars to rubber channel. Use soap solution to slide mouldings in easily.

4. Fit a strong cord in the pinchweld groove (A in Fig. 229) of the weatherstrip, starting at the top and wrapping it completely around the windshield assembly. Then, cross cord over into the outer groove (B in Fig. 229) and continue around the windshield assembly again until ends of cord overlap. Hold cord ends in position with a piece of tape on the inside surface of the windshield.

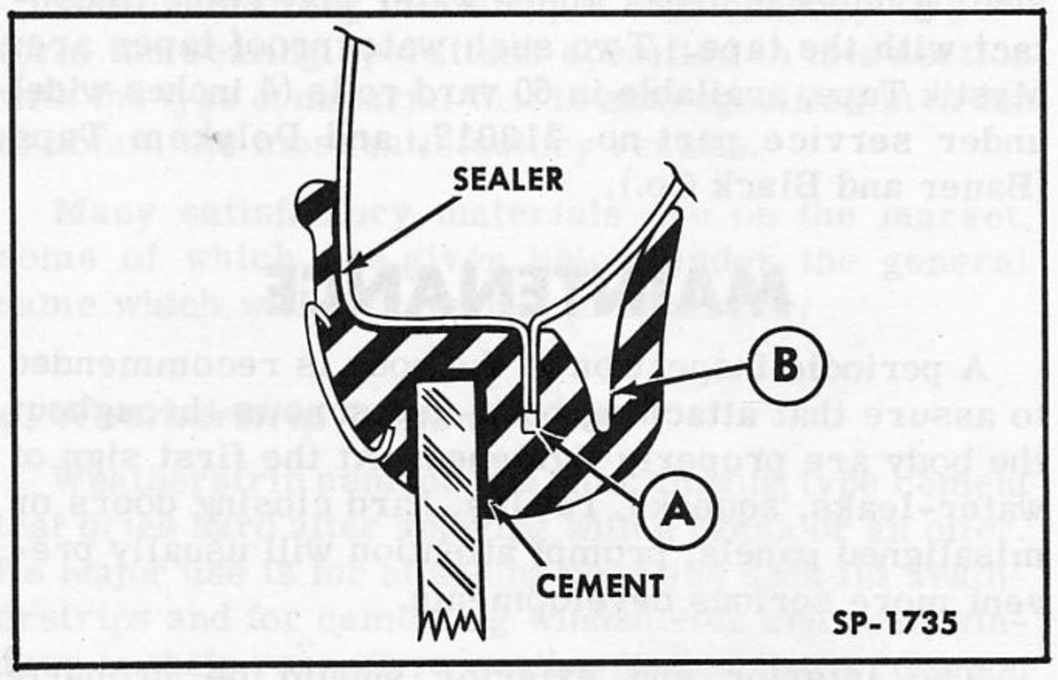

Fig. 229—Windshield Weatherstrip—Sectional View

5. Brush soap solution around pinchweld flange.

6. Place windshield assembly on body and, with the aid of a helper pushing against the outside of the windshield, pull the cord end which is in the outer groove B until the entire lip is over the pinchweld flange. Then pull the other cord end (in groove A) in the opposite direction until channel is seated over pinchweld as shown in Fig. 229.

7. Tuck inside lower lip of weatherstrip in space between instrument panel and pinchweld flange.

8. Apply body sealer between outer lip of weatherstrip and body completely around windshield. Clean off excess sealer.

9. Watertest windshield for leaks.

10. Install wiper arms and blades and remove masking tape.

REAR GLASS REPLACEMENT

When replacing the rear glass, it is necessary to remove the luggage shelf trim panel and retainer and to loosen the luggage shelf outer supports on all styles with a rear deck lid.

a. Rear Glass Removal

Remove the rear glass as follows:

1. Remove luggage shelf trim which is held in place by snap fasteners.

2. Remove luggage shelf trim retainer and screws located just below rear glass.

3. Loosen luggage shelf outer supports by removing the attaching screw from the rear end of each support.

4. Remove rear window reveal moulding and clip, on bodies so equipped, by carefully pulling flange of moulding from groove in weatherstrip.

5. Use a flat wooden paddle inserted between weatherstrip and body to loosen weatherstrip on inside and outside of rear window opening.

6. Press against outer surface of rear glass to force glass and weatherstrip from body. Start at top of window.

7. Remove rear glass assembly from body and remove glass from weatherstrip.

b. Check Rear Glass Opening

The rear glass opening in the body should be carefully checked for wavy condition and irregularities which could cause waterleaks or damage to the edge of the rear glass. Correct as necessary.

c. Rear Glass Installation

The rear glass and weatherstrip should be assembled and installed as a unit as follows:

1. Install rear glass to rubber weatherstrip. Use tape to hold weatherstrip in place on upper center of glass.

2. Apply weatherstrip cement between glass and rubber channel to seal outside joint. Use an oiler gun if available to apply cement.

3. Fit a strong cord in the pinchweld groove of the weatherstrip, starting at the bottom center and wrapping it completely around the rear glass until ends of cord overlap. Hold cord ends in position with a piece of tape on the outside surface of the glass. Brush soap solution around outer lip of weatherstrip to aid installation.

4. Apply a bead of body sealer completely around outside of pinchweld.

5. Place rear glass assembly against inside of window opening and, with the aid of a helper pushing against the inside of the rear glass, pull the cord ends as shown in Fig. 230 until entire outer lip of weatherstrip is over the pinchweld flange.

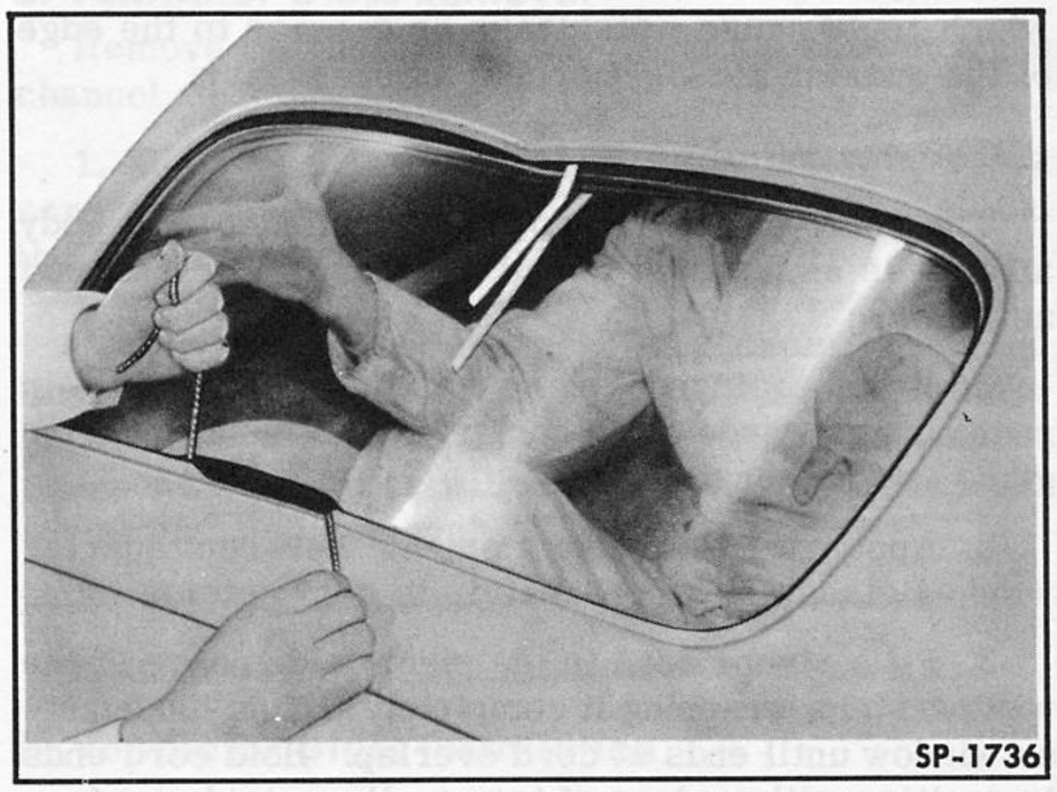

Fig. 230—Installing Rear Glass

6. Clean off excess sealer and watertest rear window for leaks.

7. Install reveal moulding, if so equipped, by inserting flange of moulding in weatherstrip groove. Start at a lower corner and work around window in both directions while tapping moulding gently with a rubber mallet. Snap clip over joint in moulding at upper center.

8. Fasten luggage shelf outer supports, install trim retainer and trim.

REAR QUARTER WINDOW REPLACEMENT

The stationary rear quarter window is removed and installed with the weatherstrip assembled to the glass. The same procedure is used on styles with or without quarter window ventilators.

a. Quarter Window Removal

Remove the rear quarter window from the body as follows:

1. On bodies with stationary rear seats, remove the rear seat back.

2. Use a flat wooden paddle to loosen weatherstrip from body on inside and outside of window opening.

3. Press against outside of quarter glass to force glass and weatherstrip loose from body.

4. Remove quarter window assembly. If equipped with a quarter window ventilator, ventilator can be removed from weatherstrip at this time along with with quarter glass if desired.

b. Check Quarter Window Opening

The quarter window opening in the body should be carefully checked for wavy condition and irregularities which could cause waterleaks or damage to the edge of the quarter glass. Correct as necessary.

c. Quarter Window Installation

The rear quarter window is installed to the body after it is assembled to the weatherstrip. Proceed as follows:

1. If so equipped, place ventilator assembly in rear quarter window weatherstrip, then install quarter glass in weatherstrip.

2. Apply weatherstrip cement between quarter window glass and weatherstrip to seal outside joint.

3. Fit a strong cord in the pinchweld groove of the weatherstrip, wrapping it completely around the quarter window until ends of cord overlap. Hold cord ends in position with a piece of tape on the outside surface of the glass. Brush soap solution around outer lip of weatherstrip to aid installation.

4. Apply a bead of body sealer completely around outside of pinchweld.

5. Place quarter window assembly on inside of window opening against pinchweld.

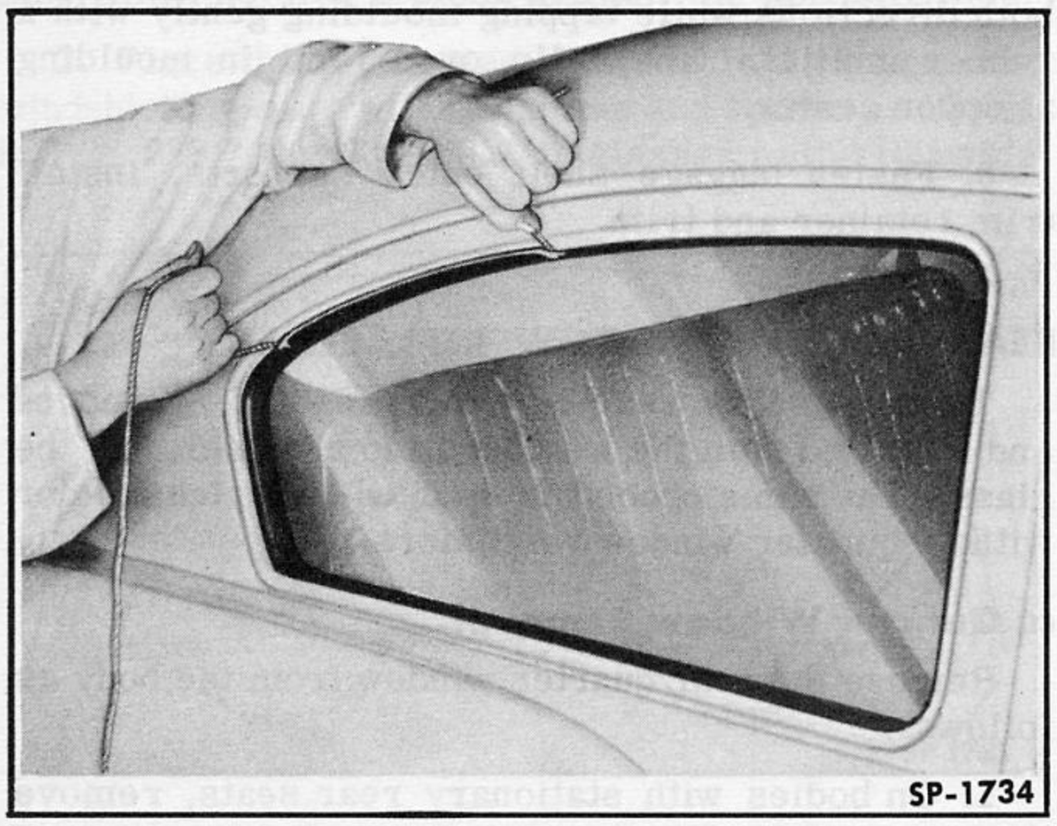

Fig. 231—Installing Quarter Window

6. From outside the body, pull cord ends as shown in Fig. 231 until entire outer lip of weatherstrip is over the pinchweld flange.

7. Clean off excess sealer and watertest quarter window for leaks.

DOOR WINDOW REPLACEMENT

The door windows can be replaced after the door trim panel is removed. The glass and lifter channel are removed from the door as an assembly.

a. Door Window Removal

Remove the door window as follows:

1. Lower window and remove window regulator handle, door lock remote control handle and escutcheons by pressing escutcheons away from handles sufficiently to push pin out of handle shaft with an awl.

2. If equipped with an arm rest, remove attaching screws and arm rest.

3. Remove door trim panel by inserting a putty knife or other suitable tool beneath trim panel edges to pry spring clips out of holes in door inner panel. NOTE: If clips are rusted to panel, tap edges of trim panel with a rubber mallet to loosen clips before removal.

4. Remove door inner panel weatherseal which is cemented and taped to inner panel.

5. Remove screw attaching door division bar to door inner panel at belt line and remove nut attaching division bar adjusting stud to inner panel at lower end of division bar.

6. Remove spring clips from window regulator studs so window assembly can be disengaged from regulator.

7. Rotate window assembly and carefully bring it out through large opening in door inner panel.

8. Remove lifter channel from lower edge of door window.

b. Door Window Installation

Install a new door window glass as follows:

1. Place a new lower channel weatherstrip on bottom edge of glass and install lifter channel by tapping it in place with a rubber hammer as shown in Fig. 232. Make sure edge of glass on bench is protected from damage while doing this operation. Application of mineral spirits, kerosene or gasoline to weatherstrip will aid in installation of channel.

2. Trim excess weatherstrip from around lifter channel.

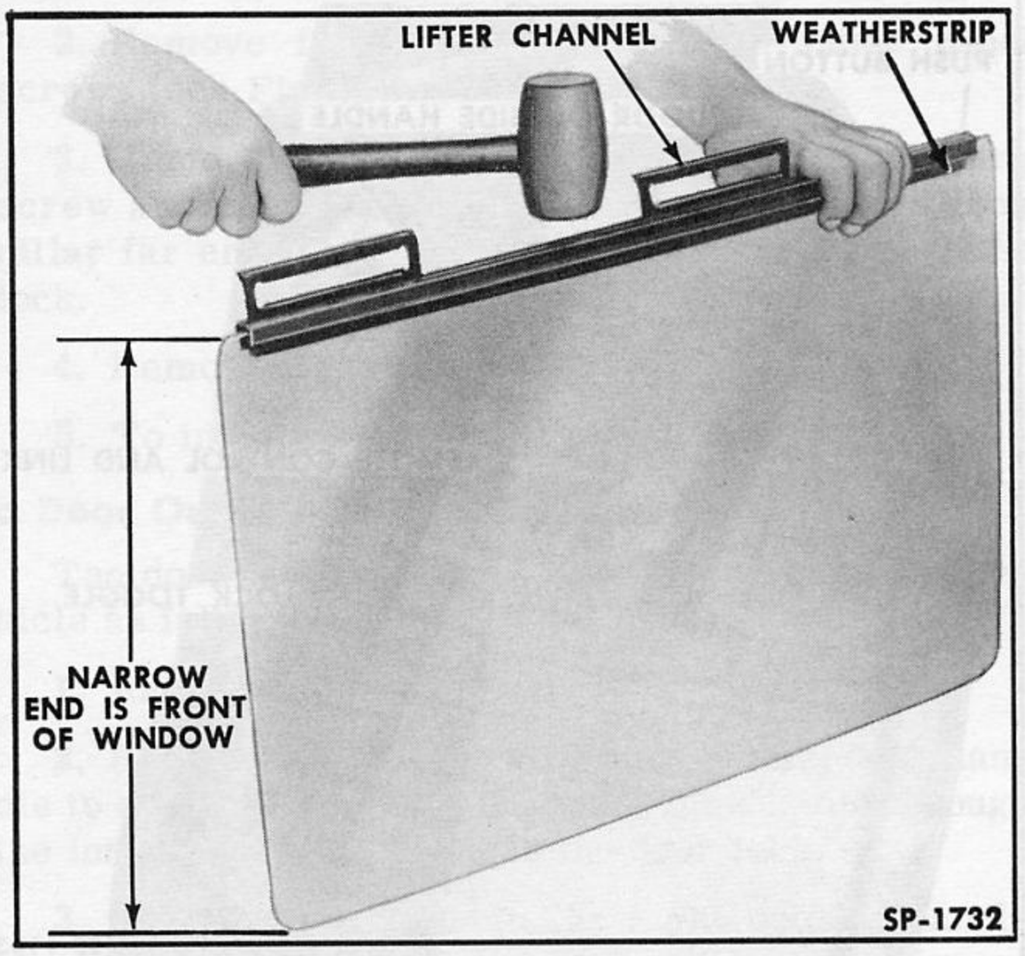

Fig. 232—Installing Door Window Lifter Channel

3. Insert door glass assembly sideways into door through large opening in door inner panel. Rotate glass to proper position, start it in division bar and rear glass run and insert window regulator studs into lifter channel slots.

4. Install new spring clips on regulator studs to hold lifter channel in position.

5. Install nut to adjusting stud at lower end of division bar and install screw attaching division bar to door inner panel at belt-line.

6. Operate window up and down to check for freeness. If window binds, check adjustments as described under "Door Window Regulator" and "Door Window Frame".

7. Brush trim cement around sides and top of door inner panel where weatherseal attaches. Install weatherseal to inner panel. Insert lower ends of weatherseal into access holes and apply waterproof tape along bottom of access holes to assure a good seal.

DOOR STATIONARY VENTILATOR GLASS REPLACEMENT

The door stationary ventilator glass is replaced as follows:

1. Remove door window frame assembly as described under "Door Window Frame" in this section.

2. Remove door division bar.

3. Remove stationary glass from rubber weatherstrip.

4. To install, reverse this procedure. Apply weatherstrip cement between glass and rubber to seal the joint.

VENTILATOR GLASS REPLACEMENT

A door ventilator glass can be replaced without removing the ventilator frame from the body if care is used not to exert excessive pressure against the pivot points. The rear quarter window must be removed from the body and the ventilator removed from the quarter window glass channel prior to replacement of the glass.

a. Ventilator Glass Removal

Remove the ventilator glass from the chrome glass channel as follows:

1. Open ventilator and carefully insert a small screw driver between the chrome glass channel and the sealing material around the glass edge.

2. Pry the glass channel loose from glass and sealing material at both top and bottom of ventilator glass. In some cases, application of mineral spirits, kerosene or gasoline will help loosen the sealing material for easy removal.

3. Pull glass and seal out of channel by hand.

4. Clean channel of all old sealing material.

b. Ventilator Glass Installation

Install a new ventilator glass to the glass channel as follows:

1. Apply a bead of body sealer inside the glass channel.

2. Place a new ventilator glass seal around the glass.

3. Brush a coating of mineral spirits, kerosene or gasoline on the glass seal. This will make the installation easier and will also cause the seal to swell after a few minutes thus making a weatherproof joint.

4. Press the ventilator glass and seal into the glass channel by hand. Support the channel with one hand while pressing glass into place in order to avoid damaging the pivots.

5. Trim excess glass seal off ventilator with a knife. Clean off any body sealer that may have been forced out of the channel.

DOORS

The doors can be completely disassembled and repairs can be made to the ventilator, window and regulator, lock and check arm without removing the door from the body.

DOOR TRIM

The door trim must be removed prior to removal of any door hardware parts. Proceed as follows:

1. Remove window regulator handle and door lock inside handle by pressing escutcheons away from handles sufficiently to push pins out of handle shafts with an awl. Remove escutcheons.

2. Remove door arm rest, if so equipped, by removing two attaching screws visible from lower side of arm rest. Screws thread into speed nuts in door inner panel.

3. Remove door trim panel by inserting a putty knife or other suitable tool beneath trim panel edges to pry spring attaching clips out of holes in door inner panel. NOTE: If clips are rusted to panel, tap edges of trim panel with a rubber mallet to loosen clips before removal.

4. Remove door inner panel weatherseal which is cemented and taped to inner panel.

5. To install, reverse this procedure. When installing inner panel weatherseal, brush trim cement around sides and top of door inner panel where weatherseal attaches. Press it in place with lower ends inserted into access holes. Apply waterproof tape along bottom of access holes as shown in Fig. 233 to assure a good seal. Apply a small amount of caulking compound over each clip hole along bottom of door.

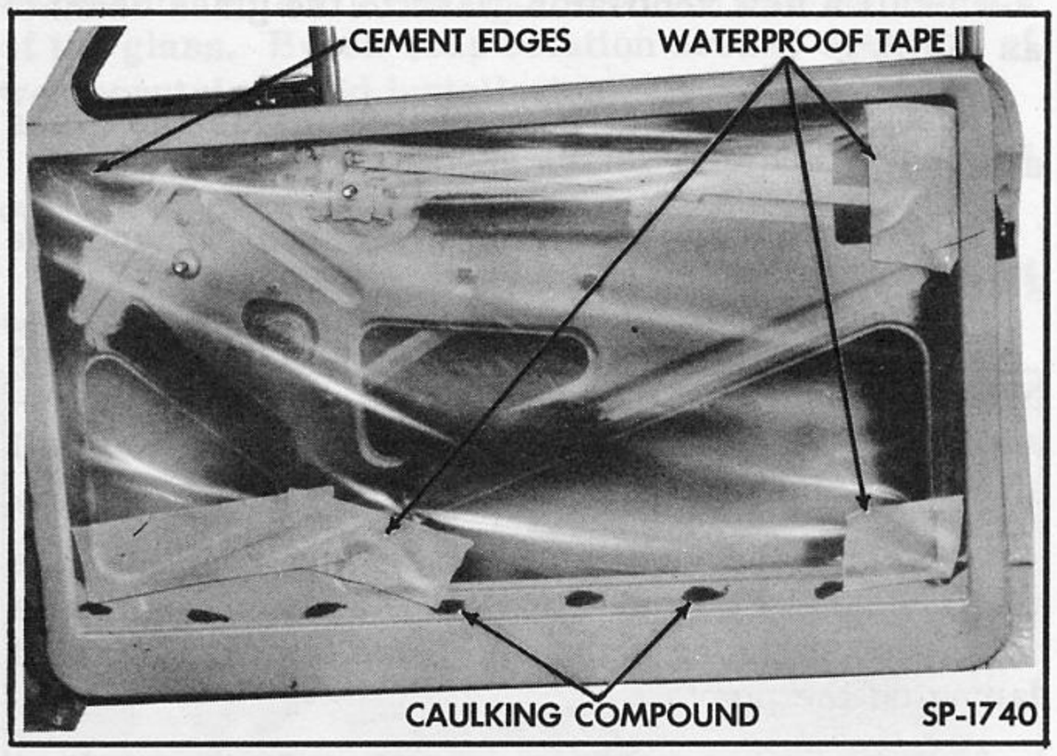

Fig. 233—Door Inner Panel Weatherseal

DOOR LOCK AND CONTROL HANDLES

The door lock is fastened to the inside surface of the door inner panel with the lock toggle extending through a cutout in the panel (Fig. 234). The door lock remote control is fastened to the inner panel and must be removed to disengage the remote control link from the lock before the lock can be removed. The outside handle does not have to be disturbed for any other removal operations. All of the following operations must be performed after the door trim has been removed as described in the previous procedure.

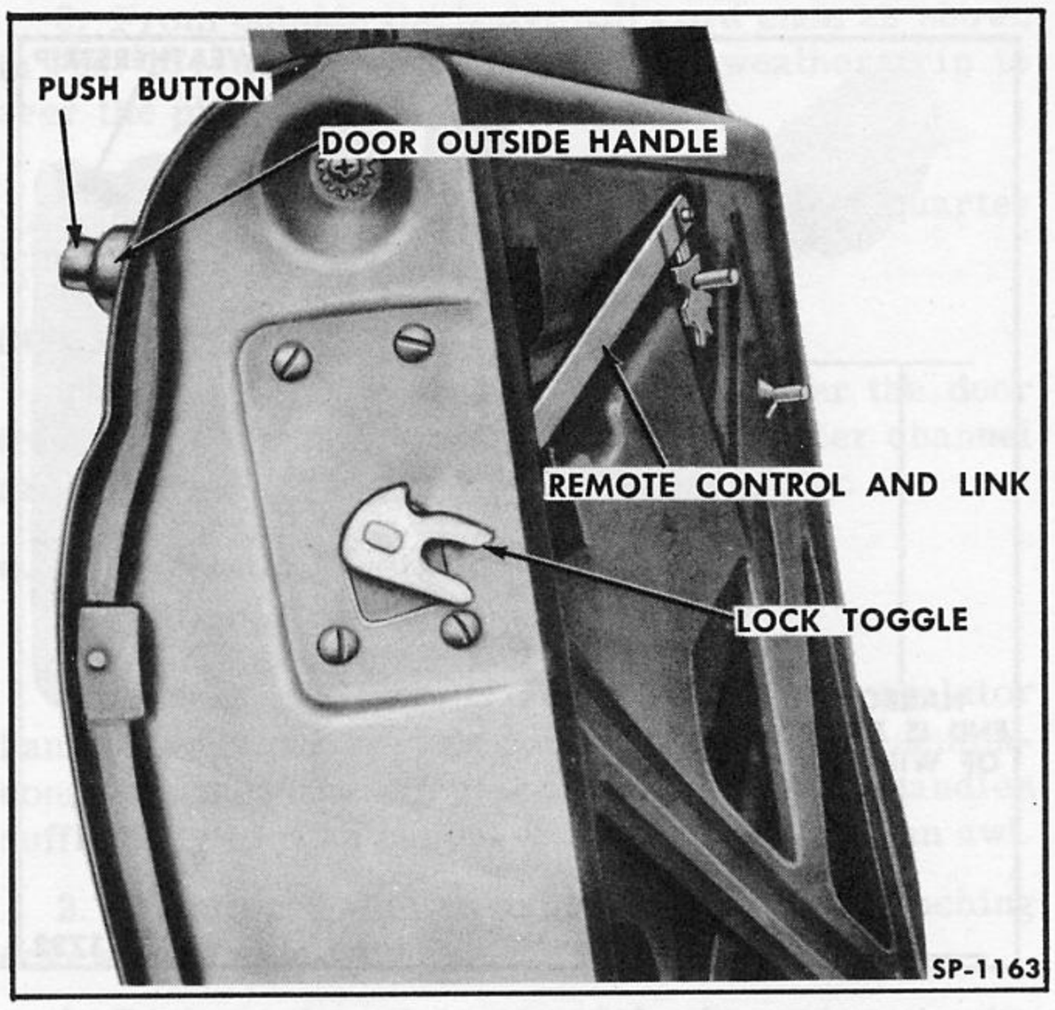

Fig. 234—Door Lock and Controls

a. Remote Control and Link Replacement

Replace the door lock remote control and link as a unit. The remote control mechanism has slotted holes for attaching screws to obtain adjustments for proper lock operation. Proceed as follows:

1. Remove remote control attaching screws (see Fig. 235).

2. Remove remote control and link after turning link to disengage it from door lock.

3. To install, reverse this procedure. Make sure remote control is adjusted for proper operation of door lock by sliding it forward or rearward as necessary.

b. Door Lock Replacement

Replace the door lock after the remote control and link are removed. Proceed as follows:

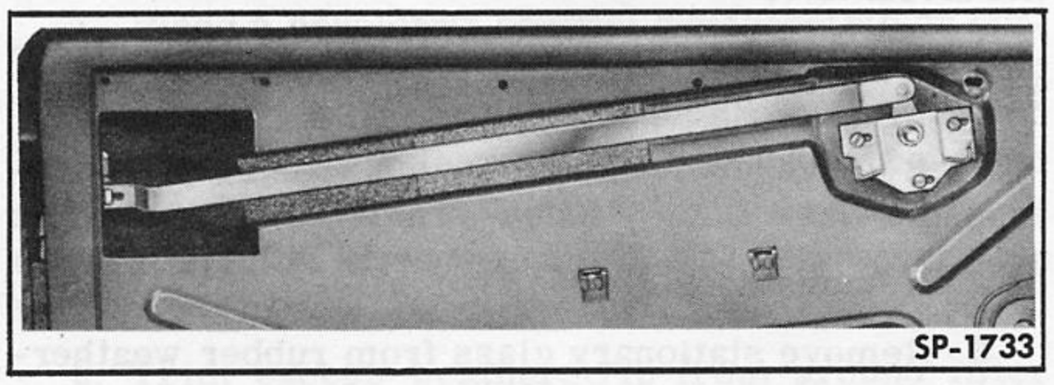

Fig. 235—Door Lock Remote Control and Link

1. Raise window.

2. Remove four door lock to door inner panel screws (see Fig. 234).

3. Remove rear glass run channel lower attaching screw and move channel away from inner panel lock pillar far enough to permit clearance to remove the lock.

4. Remove door lock.

5. To install, reverse this procedure.

c. Door Outside Handle Replacement

The door outside handle is removed from the vehicle as follows:

1. Raise window.

2. Remove two screws attaching outside door handle to door outer panel. They are accessible through the inner panel cut-out near the door lock.

3. The lock cylinder in the right outside handle can be serviced if necessary after the handle is removed.

DOOR WINDOW REGULATOR

The door window regulator (Fig. 236) is attached to the door inner panel with screws and operates the door window when the handle is turned. The regulator can be replaced after the door trim is removed as follows:

1. Lower window.

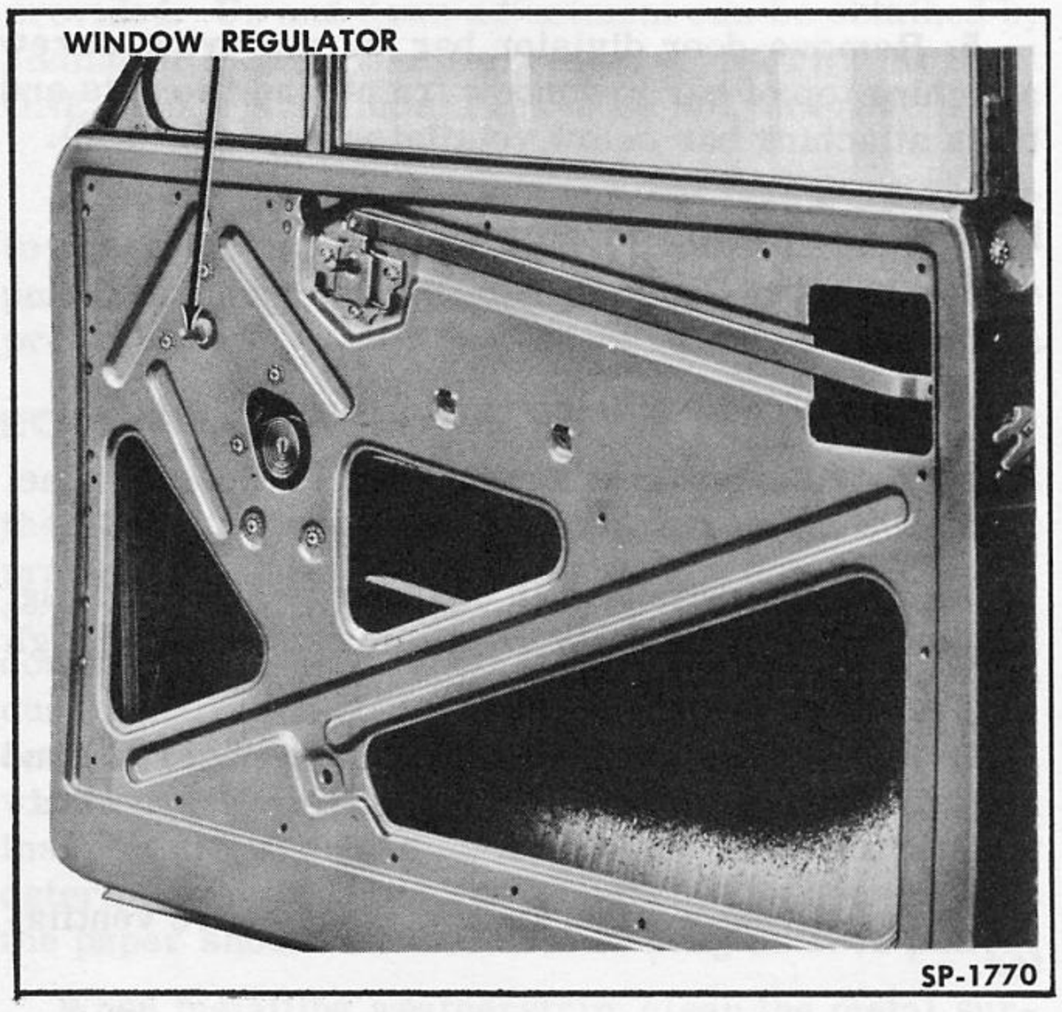

Fig. 236—Door Window Regulator

2. Remove spring clips from window regulator studs so window lifter channel and window can be disengaged from regulator. Carefully lower window and allow it to rest against bottom of door.

3. Remove screws attaching door window regulator to door inner panel and remove regulator from door by bringing it out the large access hole in the door inner panel.

4. To install, reverse this procedure. Apply a small amount of grease such as Lubriplate #105 on the regulator studs and in the window lifter channel slots.

5. After installation, check operation of window. If window binds, loosen regulator attaching screws and rotate regulator slightly (attaching screw holes in inner panel are slotted) until window operates satisfactorily. It may also be necessary to adjust the window frame as described under "Door Window Frame" in this section.

DOOR CHECK

The door check consists of the arm (Fig. 237), a spring guide which is attached to the door, and a pivot bracket welded to the body hinge pillar. The arm pivots on the pivot bracket by means of an attaching rivet. Replace the door check parts as follows:

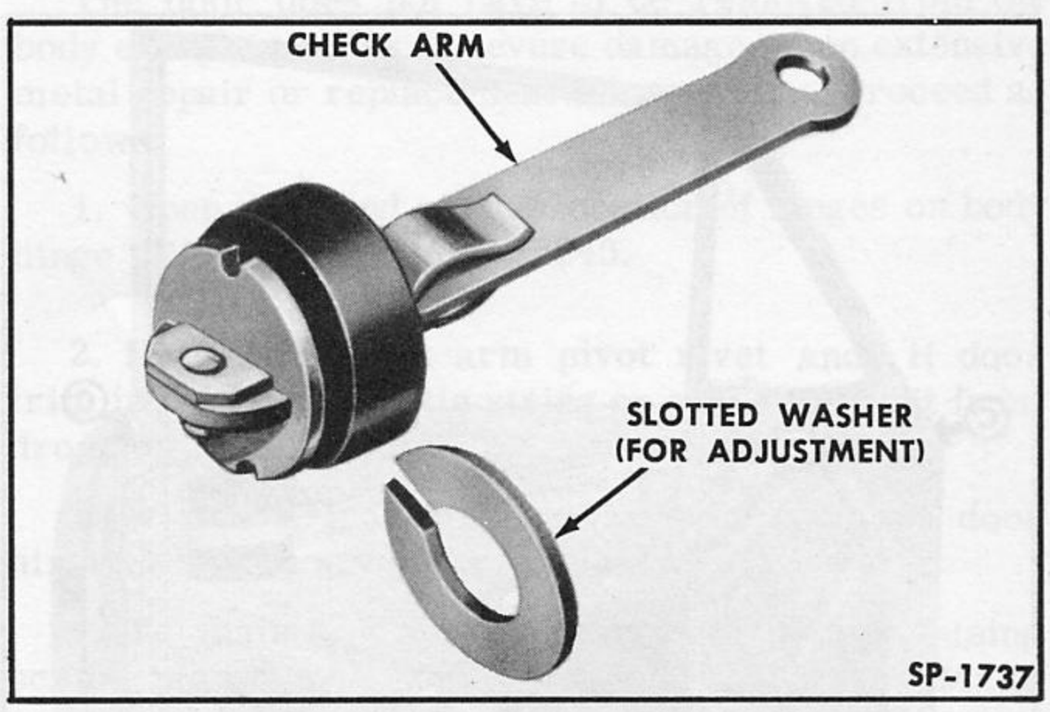

Fig. 237—Door Check Arm

1. To replace pivot bracket, cut old bracket off body hinge pillar with a chisel or torch and weld a new bracket in place, drill out old pivot rivet and install check arm to new bracket with a new pivot rivet. Use proper precautions when welding to avoid damage to trim or paint.

2. To replace check arm, remove door trim, drill out pivot rivet and remove check arm from inside door. Insert new check arm through check arm guide and install new pivot rivet to hold arm to support.

3. To replace check arm guide, remove check arm, remove attaching bolts or rivets and remove guide. Install new guide with attaching bolts and nuts and install check arm.

4. If check arm allows door to open too far, make a slotted washer as shown in Fig. 237 and insert between rubber and steel washers on check arm.

DOOR WINDOW FRAME

The door window frame can be removed from the door with the stationary window (or ventilator if so equipped) and door division bar still attached. Proceed as follows:

1. Lower door window and remove door trim.

2. Remove nut (A in Fig. 238) attaching door division bar lower adjusting stud to inner panel.

3. Remove screws (B in Fig. 238) attaching lower ends of door window frame to inner panel.

4. Remove screws (C in Fig. 238) attaching door window frame and door division bar to door inner panel at belt and lift door window frame, ventilator assembly and division bar out of door as a unit.

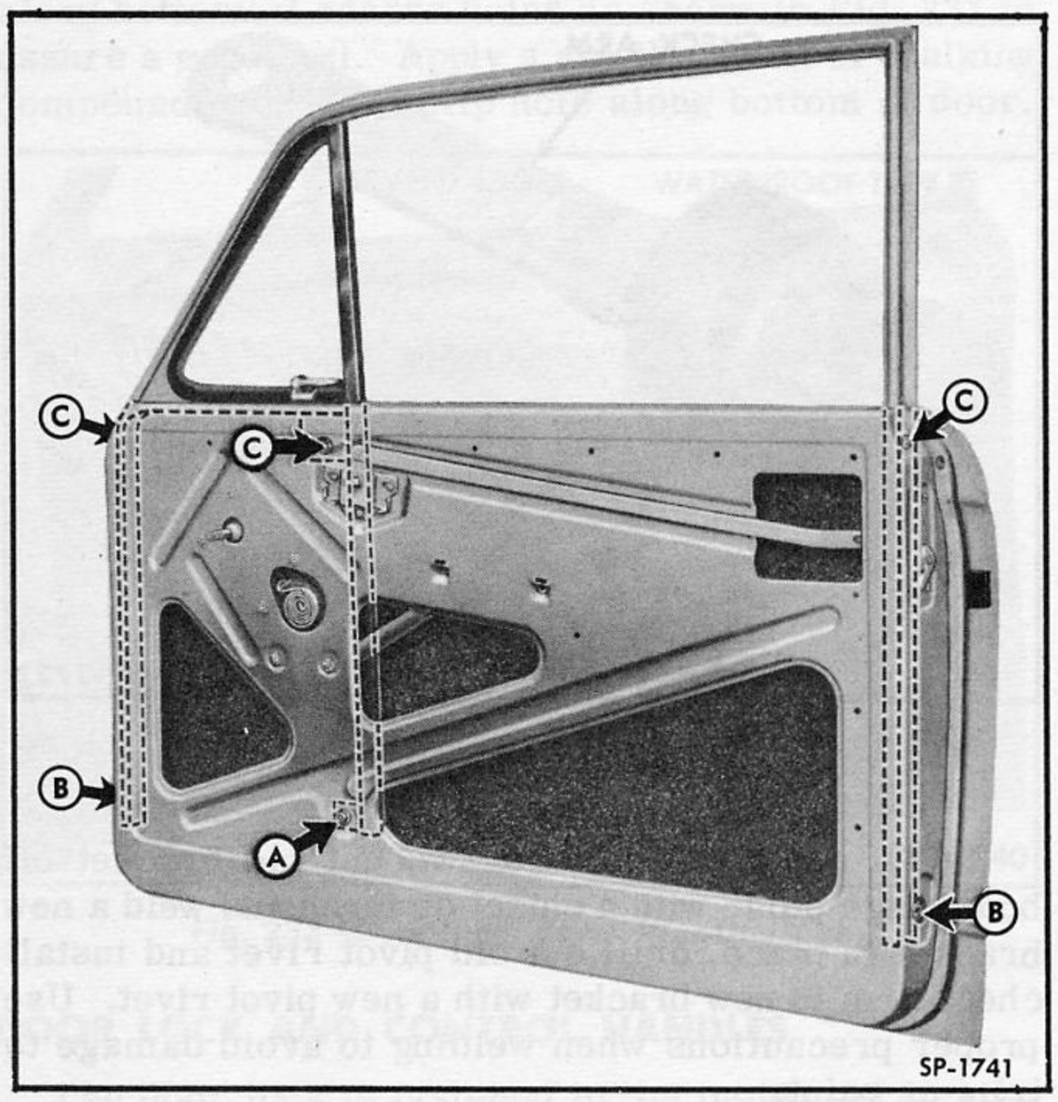

Fig. 238—Door Window Frame Attachment

5. Door division bar and ventilator can be removed from door window frame as described under "Door Ventilator Parts" in this section.

6. To install, reverse this procedure. Before attaching division bar to inner panel, make sure door glass is in glass run channels properly.

7. Adjust door window frame at lower attaching points A and B in Fig. 238 for proper compression of door weatherstrip along side roof rail when door is closed. Adjustment at these locations will also provide free door window operation.

DOOR VENTILATOR PARTS

The door ventilator (special equipment) consists of the ventilator frame and glass, ventilator weatherstrip, handle parts, friction parts and pivots. The handle parts can be replaced with the ventilator in the door, the other parts, however, are replaced after the door window frame is removed from the door.

a. Door Ventilator Disassembly

The following procedure is for a complete disassembly of ventilator parts:

1. Remove door trim.

2. Remove door window frame and vent assembly as a unit (refer to "Door Window Frame" in this section).

3. Remove ventilator frame and glass by removing lower pivot nut, spring and washers and removing two upper pivot attaching screws. Disengage upper pivot from ventilator frame and lift ventilator to disengage lower pivot.

4. Remove ventilator weatherstrip from its retaining channel.

5. Remove door division bar by removing screw attaching top of bar to window frame and two nuts and bolts attaching bar below ventilator (see Fig. 239).

b. Door Ventilator Assembly

Assemble the ventilator to the door window frame as follows:

1. Install door division bar to window frame.

2. Install vent weatherstrip in retaining channel along bottom only.

3. Place stopwashers in position as shown in Fig. 239 and insert ventilator frame lower pivot through weatherstrip, stopwashers and window frame.

4. Place upper pivot through vent weatherstrip and into bracket on vent frame. Install upper pivot attaching screws.

5. Press vent weatherstrip in place above ventilator.

6. Install washers, spring and nut to lower pivot. Tighten nut until ventilator opens and closes with

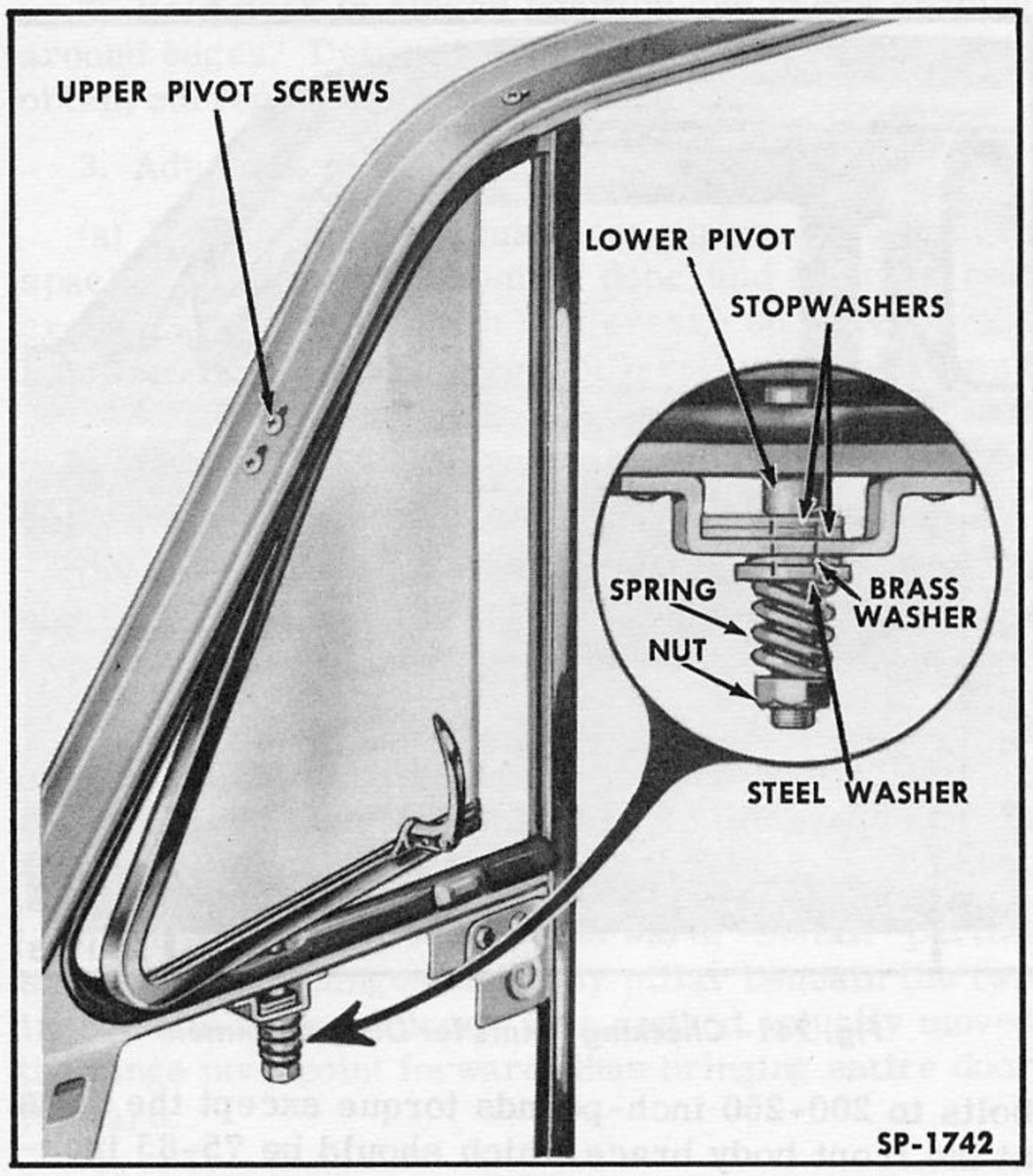

Fig. 239—Door Ventilator Installation

proper friction as compared to another assembled ventilator.

7. Ventilator can be adjusted fore and aft in its opening by moving upper pivot attaching screws in slots provided. Up and down adjustment can be obtained by adding or removing stop washers. NOTE: At least ONE stop washer must always be left on lower pivot.

8. Install ventilator and window frame assembly to door. Before attaching division bar to door inner panel, make sure door glass is in glass run channels properly.

DOOR WEATHERSTRIP

A sponge rubber weatherstrip is cemented around the door and door window frame and, on some later production bodies, along the body hinge pillar to provide a positive weatherseal. The weatherstrip should compress slightly against the body to keep out water, dust and air, and still allow easy door closing. Proper door alignment is very important in obtaining a good weatherseal. A two inch wide strip of writing paper inserted between the door and body may be used to determine proper compression. With the door closed, the paper should have a definite drag as it is pulled.

When installing weatherstrip, clean the metal surface thoroughly and apply weatherstrip cement to both surfaces as directed on the package. After installing weatherstrip, allow sufficient time for drying before closing door and watertesting.

The door inner panel weatherseal can be removed and installed as described under "Door Trim" in this section. Whenever the door trim and weatherseal are removed, the drains in the bottom of the door should be checked. Dirt and debris can plug the drains and cause water to remain inside the door. Drains can be cleared without removing door trim by inserting a screwdriver from underneath door.

DOOR LOCK STRIKER

The door lock striker is mounted on the body lock pillar by two bolts which attach into a caged nut plate inside the rear quarter panel assembly. The striker is adjustable to obtain proper door closing pressure and to obtain a flush fit of the door outer panel to the body along rear edge of the door. Shims can be installed between the striker and pillar to provide more lock engagement if necessary. Always scribe the location of the striker on the body lock pillar to facilitate installation in the same location. The striker should be adjusted as described under "Door Adjustments" below.

DOOR REPLACEMENT

The door does not have to be removed from the body except in cases of severe damage, when extensive metal repair or replacement is necessary. Proceed as follows:

1. Open door and scribe location of hinges on body hinge pillar. Refer to Fig. 240.

2. Drill out check arm pivot rivet and, if door trim is not removed, tie string on arm to keep it from dropping in door.

3. With a helper holding the door, remove door hinge to body bolts and remove door.

4. To install, fasten door hinges to body, using scribe marks to line up hinges temporarily. Make sure anti-squeak material is inserted between hinge and body.

5. Install new check arm pivot rivet.

6. Adjust door as described under "Door Adjustments" in this section.

DOOR ADJUSTMENTS

The door hinges are attached with bolts which thread into caged nut plates in both the door and the body hinge pillar. Oversize holes in the outer metal allow up, down, in or out adjustment of the doors at either the body half of the hinges or the door half of

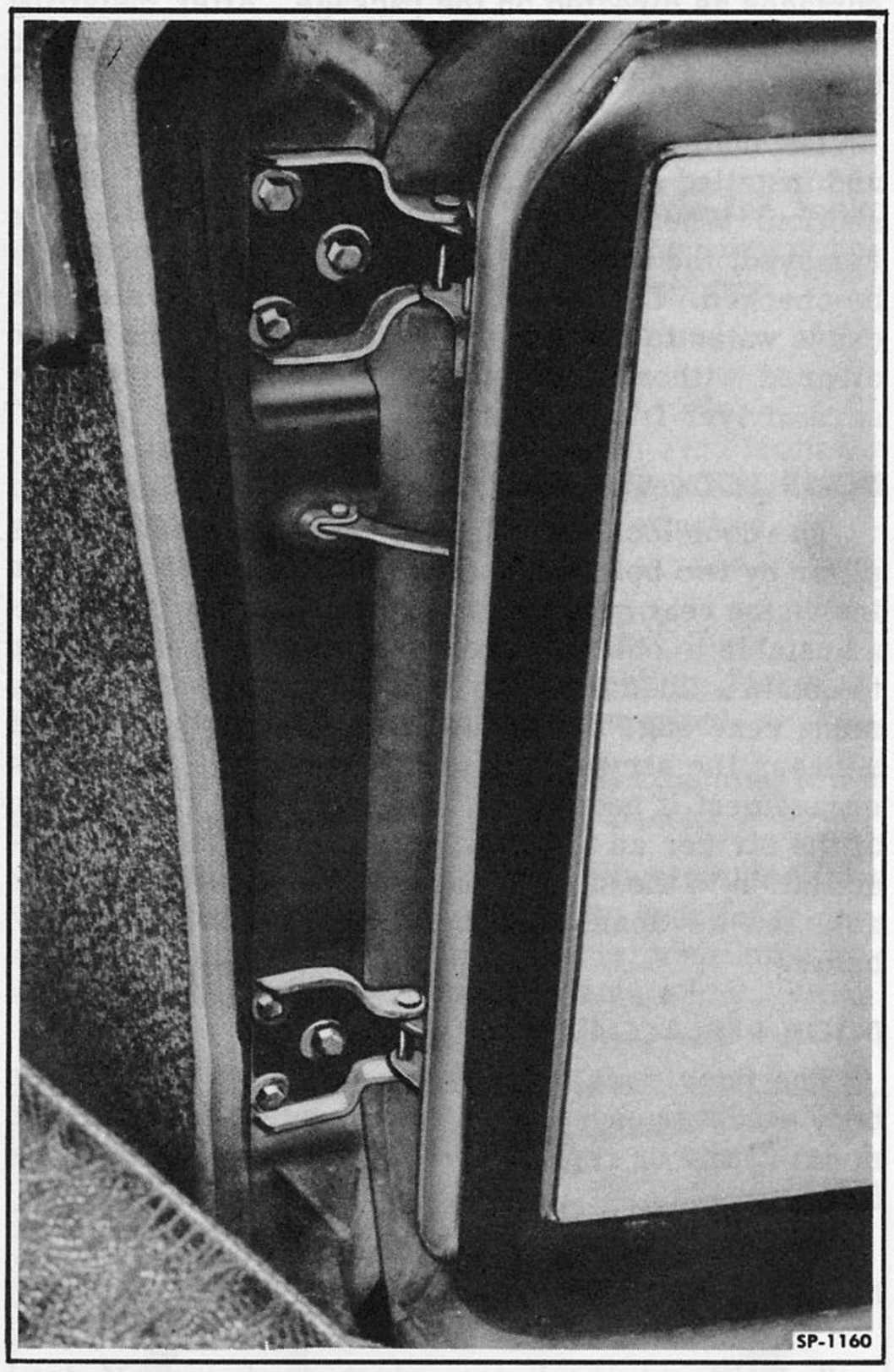

Fig. 240—Door Hinge Mounting

the hinges. Doors can be adjusted fore and aft by using shims between the hinge and the door or the body.

The door should be aligned in the body opening to obtain proper spacing around all edges of the door and to obtain flush fits of external panels at the rocker panel and at the belt line (Fig. 241).

In some cases, when the door opening does not have the same shape as the door, the door opening can be corrected by changing shims between body and frame. For example, in Fig. 242, the door opening is properly spaced at sides but spacing on bottom edge of door is narrow at rear and wide at front. Belt line also indicates misalignment. In this case, the thickness of shims between body and frame should be reduced at body bolts near lock pillar or added at body bolts near hinge pillar. Always tighten body mounting

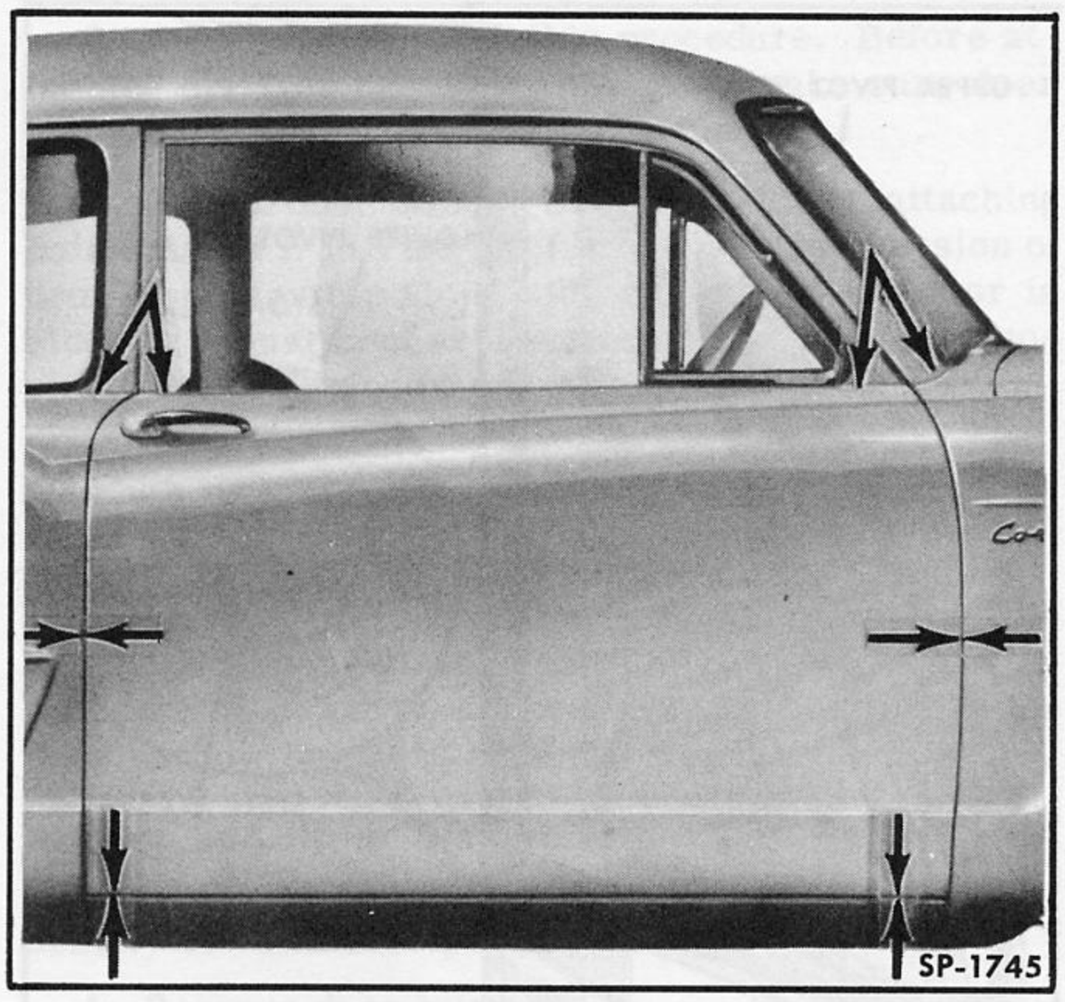

Fig. 241—Checking Points for Door Alignment

bolts to 200-250 inch-pounds torque except the bolts at the front body brace which should be 75-85 inch-pounds.

A general procedure to be followed when fitting and aligning doors to the body opening is as follows:

1. Remove door lock striker plate after scribing its location on body lock pillar.

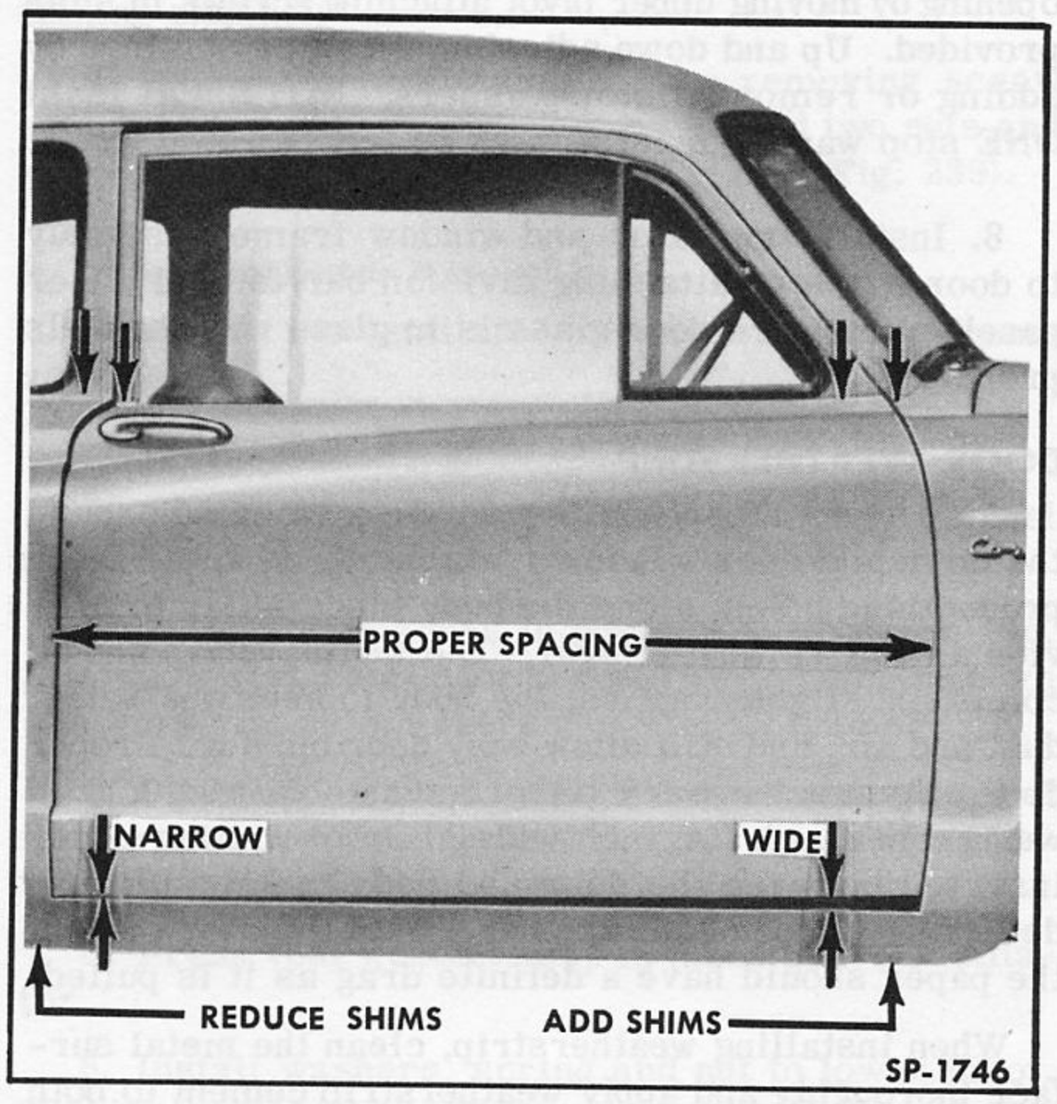

Fig. 242—Effect of Improper Body Shims on Door Fit

2. Hold door in closed position and check spacing around edges. Determine how door must be moved to obtain correct alignment.

3. Adjust as follows:

(a) If door needs adjustment up or down to even spacing at top and bottom of door and to make belt crease on door aline with belt crease on body, scribe location of hinges on hinge pillar, loosen bolts and move hinges as required. If adjustment on body half of hinges is not sufficient, make adjustment on door half of hinges also.

(b) If door outer panel surface is not flush with body panel surfaces along front edge of door, loosen hinge bolts and move door in or out as required.

(c) If door is too far forward, place waterproof cardboard shims between hinges and body pillar (or door pillar). Install shims of same thickness at both hinges, otherwise door will "cock" in door opening.

(d) If door is too far rearward, install partial shims between hinges and body pillar beneath the two inner bolts on each hinge. This method actually moves the hinge pivot point forward, thus bringing entire door forward.

4. Install door lock striker and adjust so door lock toggle will rest firmly against the striker wedge when door is in the safety position as illustrated in Fig. 243. This will prevent the door from opening while in the safety position.

REAR FENDER REPLACEMENT

The rear fender is bolted to the rear quarter panel for easy replacement. The following procedure should be used:

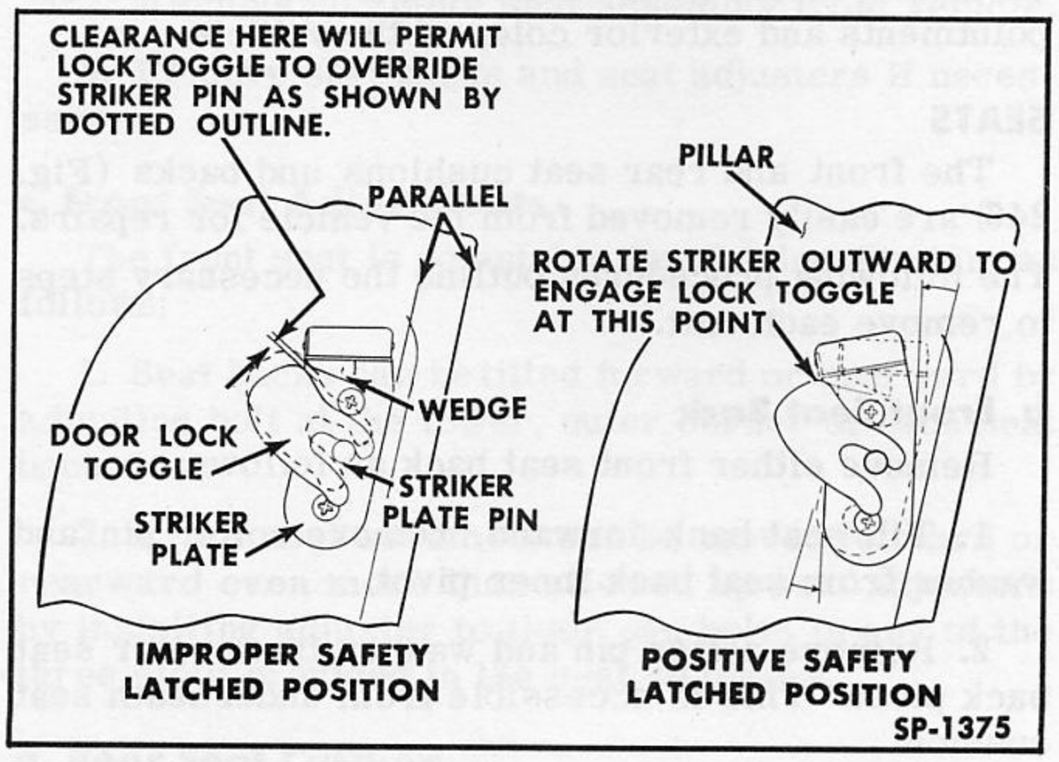

Fig. 243—Door Lock and Striker Engagement

1. Disconnect stop and tail light wiring.

2. Remove rear quarter inside trim and rear compartment trim to allow access to attaching bolts at A in Fig. 244.

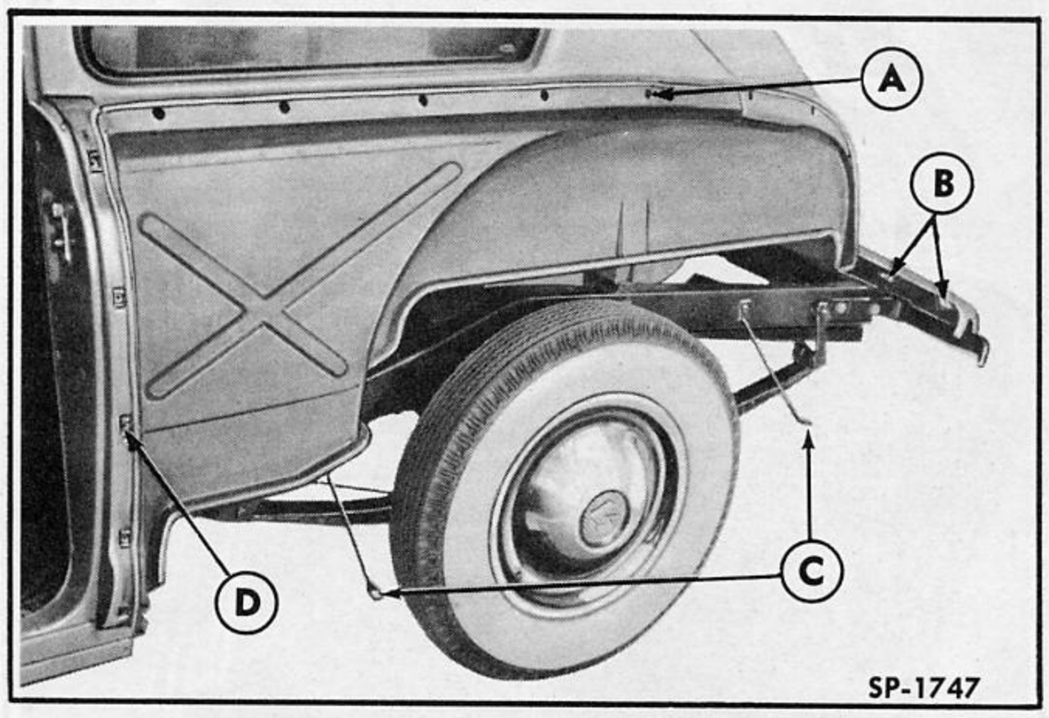

Fig. 244—Rear Fender Attaching Points

3. From inside body, remove upper attaching bolts and lockwashers at A in Fig. 244.

4. Remove rear stone deflector to rear fender screws at B in Fig. 244.

5. Remove bolts, nuts and washers attaching fender to braces C in Fig. 244.

6. Remove forward attaching bolts and washers at D in Fig. 244 and remove fender. NOTE: On right rear fenders, it is necessary to remove fuel tank filler neck cap.

7. To install the rear fender, clean off attaching surfaces and apply a ribbon of caulking compound on body as shown in Fig. 244. Also apply caulking compound around each upper hole A in Fig. 244 from inside body. Make sure speed nuts are on rear fender at upper attaching locations.

8. Install rear fender with attaching bolts installed loosely. Align fender and tighten all attaching bolts and screws.

9. Clean off any excess caulking compound.

10. Connect tail and stop light wiring.

REAR DECK LID

The rear deck lid is mounted on two hinges (Fig. 245) which are welded to the reinforcement below the rear glass. Adjustments are provided at the lid hinges and at the lid lock striker to obtain even spacing between lid edges and body, and to obtain proper compression of the lid weatherstrip.

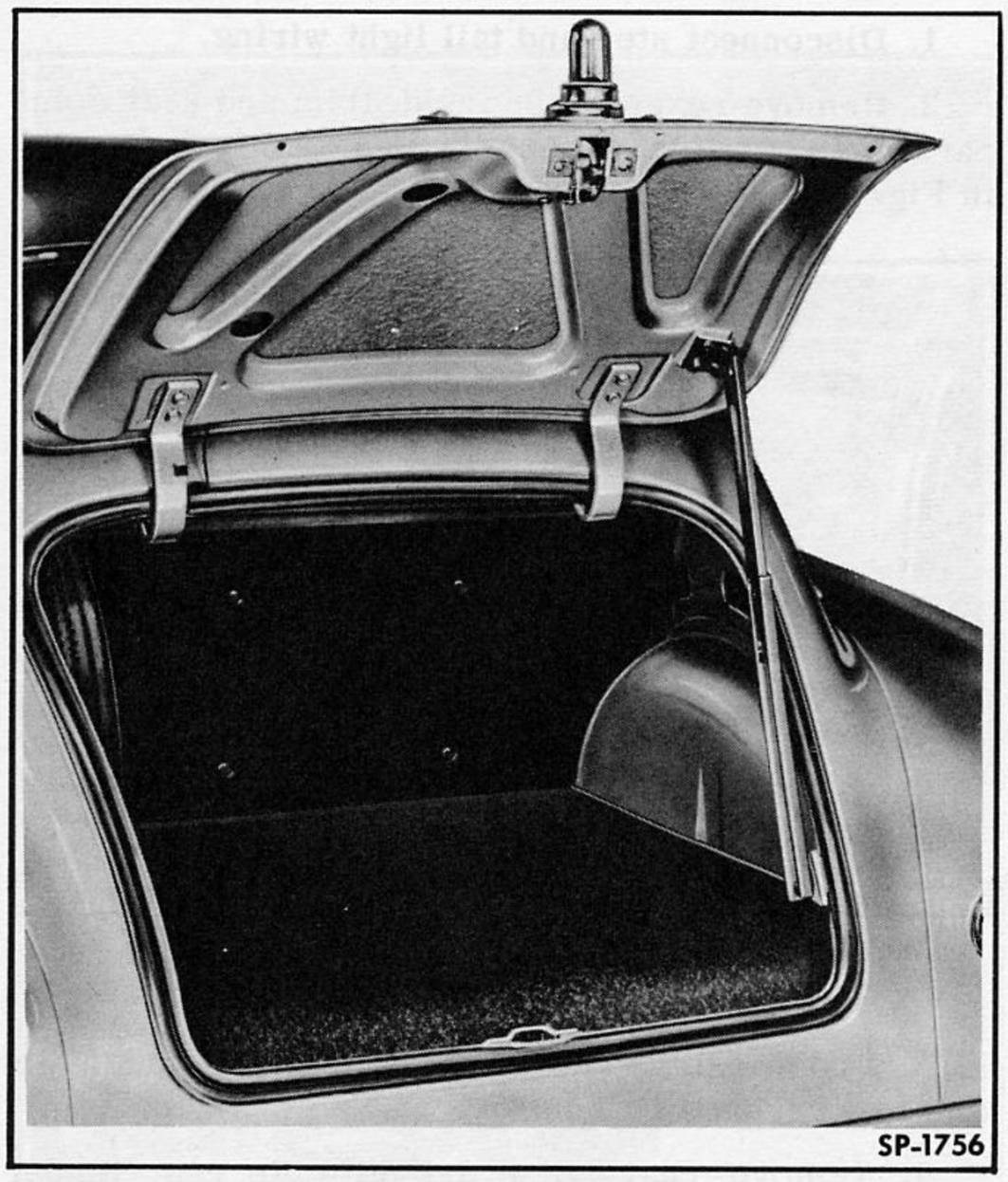

Fig. 245—Rear Deck Lid

DECK LID LOCK AND STRIKER

The lid lock striker is attached to the body at the lower deck lid opening by two bolts and lockwashers. The striker is adjusted as explained under "Deck Lid Adjustments" in this section.

The deck lid lock is operated by a lock cylinder which is housed in the license light assembly. Remove the lock as follows:

1. Open deck lid and remove cotter pin, flat washer and spring washer from end of lock cylinder shaft.

2. Disconnect license light assembly and remove light by removing one screw from inside deck lid and two screws outside.

3. Remove lock cylinder by lifting out of deck lid.

4. Remove screws attaching lock to lid inner panel and remove lock.

5. To install, reverse this procedure. When installing lock, tighten screws holding lock to bottom of lid before tightening screws holding it against lid inner panel.

DECK LID WEATHERSTRIP

The deck lid weatherstrip is cemented into a gutter in the body opening with the sealing lip extending upward to contact the lid. When replacing the weatherstrip, clean the gutter, press caulking compound over any welds in the gutter and install the weatherstrip using weatherstrip cement.

DECK LID REPLACEMENT

The rear deck lid can be replaced as follows:

1. Open the lid and disconnect license light wiring.

2. Support the lid while removing bolts attaching lid prop to lid.

3. Scribe the location of hinges on deck lid to facilitate installation.

4. Remove hinge bolts and remove deck lid.

5. To install, reverse this procedure, making sure anti-squeak shims are placed between hinges and lid.

6. Adjust the deck lid as described under "Deck Lid Adjustment" below.

DECK LID ADJUSTMENT

The deck lid can be adjusted for equal spacing around the edges by scribing the location of hinges on the deck lid, then loosening hinge to deck lid bolts and moving lid as necessary.

The lid must also fit flush with adjacent body surfaces. Use shims between hinges and body to obtain flush fits of the upper portion of the deck lid. The flush fit of the lower portion of the lid and proper weatherstrip compression are both controlled by the lid lock striker. The striker is adjustable up and down and can be moved forward by using shims.

INTERIOR TRIM AND SEATS

Interior trim of various materials and colors has been designed and styled for seat upholstery, trim panels and headlinings to blend with other interior appointments and exterior color of the vehicle.

SEATS

The front and rear seat cushions and backs (Fig. 246) are easily removed from the vehicle for repairs. The following procedures outline the necessary steps to remove each unit.

a. Front Seat Back

Remove either front seat back as follows:

1. Tilt seat back forward, remove cotter pin and washer from seat back inner pivot.

2. Remove cotter pin and washer from outer seat back pivot. This is accessible from underneath seat cushion.

3. Remove seat back.

Fig. 246—Front and Rear Seats

b. Front Seat Cushion

Remove the front seat cushion by removing the cushion and seat adjusters as a unit. The seat backs may be removed (if desired) before or after the cushion is removed from the vehicle.

1. Remove two bolts attaching each seat adjuster to floor pan.

2. Remove complete seat assembly from vehicle.

3. Remove seat backs and seat adjusters if necessary.

c. Front Seat Adjustments

The front seat is adjustable for driving comfort as follows:

1. Seat backs can be tilted forward or rearward by adjusting bolt at the lower, outer corner of each seat back.

2. Front seat assembly can be moved forward or rearward even more than allowed by seat adjusters by installing adjuster to floor pan bolts in any of the three slots provided in the seat adjusters.

d. Rear Seat Cushion

The rear seat cushion is held in place by metal tabs welded to the floor pan which hook into the cushion spring frame. To remove, merely lift up and pull forward on the cushion.

c. Rear Seat Backs

The rear seat back on vehicles with a stationary rear seat, is removed by straightening a metal tab at each lower corner of the seat back, removing two screws attaching lower end of seat back frame to floor pan riser, then removing seat back by lifting it off metal hooks on the parcel shelf. To remove the folding rear seat back (Fig. 247), remove screws attaching seat back to hinge and remove seat back. When installing, make sure ball stud catches, mounted on each wheelhouse, are adjusted correctly to engage the spring clip inside the rear seat back and hold the seat back in an upright position. The props installed on the floor pan are used to hold the seat back in a folded position as shown in Fig. 247.

TRIM PANELS

Trim panels used on doors, rear quarters, rear compartment, parcel shelf and on cowls are all installed for quick and easy removal. The door and quarter trim panels are attached by concealed spring clips around the outer edges. The door trim panel removal is detailed under "Door Trim" in this section. The rear quarter trim panel is removed by removing the ash tray (if so equipped), then loosening spring clips along forward and upper edges. The lower and rear edges of the quarter trim panel set into small metal channels to hold the panel in place.

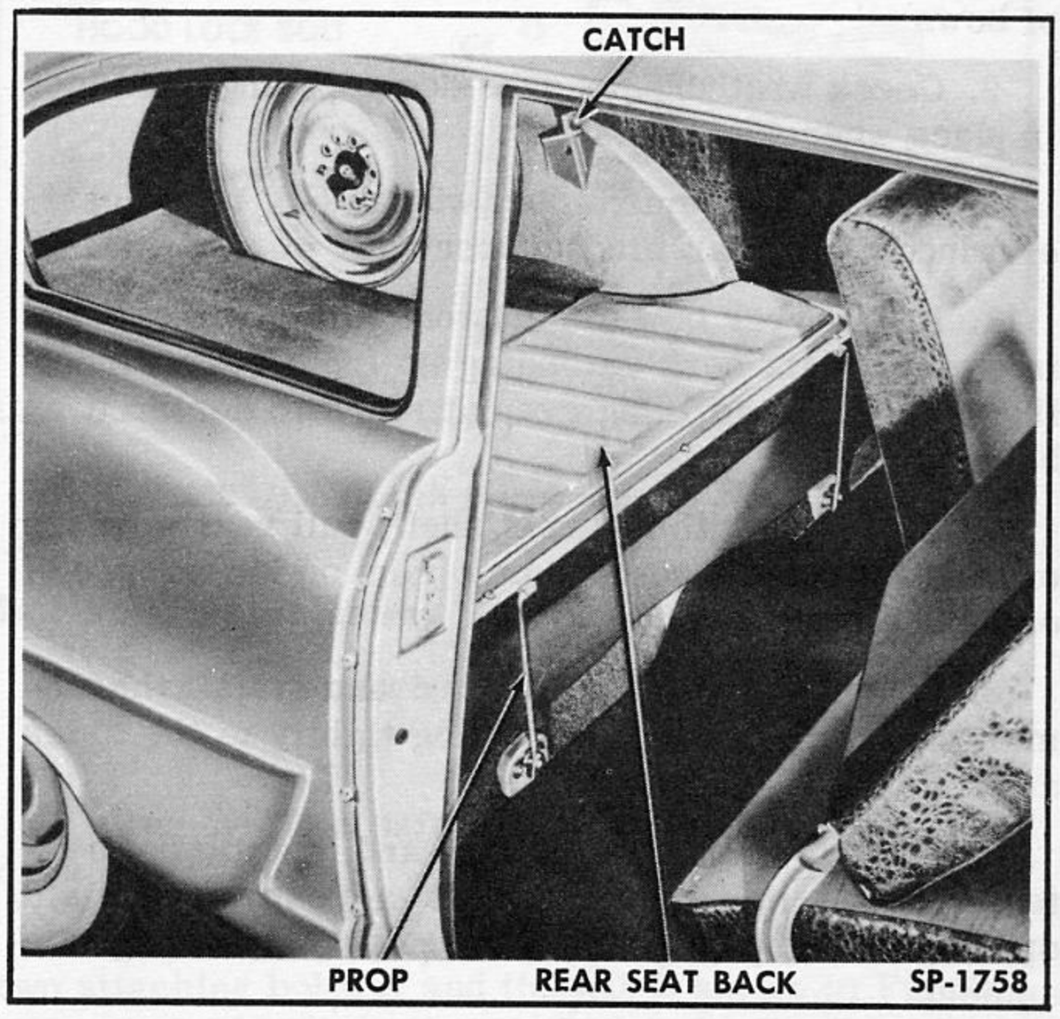

Fig. 247—Folded Rear Seat

Rear compartment and parcel shelf trim is held by exposed button clips while cowl side trim panels are held by exposed screws and washers.

HEADLINING

The complete headlining is replaced by the following procedure:

1. On styles with stationary rear seat, remove rear seat back.

2. Remove windshield, rear glass and rear quarter windows as described under "Glass Replacement" in this section.

3. Remove inside sun visors, dome light or rear view mirror as necessary.

4. Carefully bend down wire-on-binding over door opening and remove staples (or tacks) holding binding in place.

5. Loosen headlining over door opening by removing attaching staples or tacks.

6. Loosen headlining from its cemented position over windshield, rear quarter windows and rear glass. Headlining is also held at windshield, rear window and parcel shelf by metal prongs which must be straightened.

7. Remove headlining and bows by unhooking bows from side roof rails.

8. Obtain a new headlining and trim all listing pockets (in which bows are inserted) to a length slightly less than the bow length. Insert all bows in their proper listing pocket and install clips on ends of bows.

9. Check weathercord over door openings and tack in place wherever necessary.

10. Apply trim cement over windshield, rear quarter window and rear window openings.

11. Install rear bow to side roof rails and hook bow into metal retainers extending up from rear window frame. Pull headlining even at sides to center it on bow.

12. On styles with a parcel shelf, pull rear corners of headlining taut and hook onto tabs on lower edge of outer shelf supports.

13. Stretch headlining forward and install the remaining bows, pulling headlining tightly to the sides at each bow.

14. Stretch headlining forward and, starting at center, hook it into metal prongs across windshield opening. Bend prongs over and press headlining into cement.

15. Install headlining over rear window opening in same manner as at windshield.

16. Press edges of headlining into cement above quarter windows, then trim off excess material at window openings.

17. Fold material under and tack in place over door openings. Then tack binding in place and bend binding over to cover tacks.

18. Install windows, sun visors, dome light, rear view mirror and rear seat back if they were removed.

INSTRUMENT PANEL COVER

On some 1953 models, an instrument panel cover (Fig. 248) is installed over the upper portion of the instrument panel. This cover consists of a foundation panel, the trim material and the upper and lower mouldings attached to the foundation panel with screws which are accessible when cover is removed from instrument panel. To remove the cover and mouldings from the instrument panel, remove attaching screws which extend through mouldings into instrument panel.

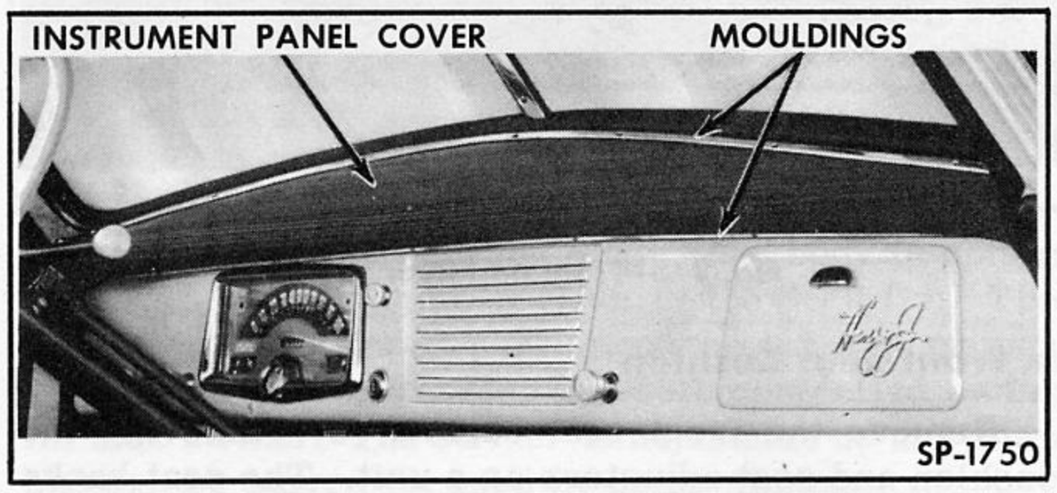

Fig. 248—Instrument Panel Cover

CARE OF UPHOLSTERY

The Vinylite upholstery material used on some styles should never be cleaned with furniture polishes, oils, varnishes, ammonia water or cleaning preparations. These materials can cause stickiness and loss of luster.

The following procedure is recommended for cleaning Vinyl upholstery:

1. Use lukewarm water and mild soap.

2. Work up a thin suds on a piece of cheesecloth and apply to the surface.

3. Wipe the surface with a piece of cheesecloth dampened with clear water.

4. Finish by wiping the surface with a dry soft cloth. This will restore the original luster.

On styles using cloth upholstery, the cloth requires periodic cleaning to retain its natural beauty and give satisfactory service. Dust and dirt particles that fall

on the surface of the upholstery can normally be removed with a whisk broom or vacuum cleaner.

Immediate attention should be given to clean the cloth upholstery whenever any material which may cause stains accidentally contacts the fabric. All stains cannot be removed, however many of the more common stains can be removed by using the proper method of cleaning as follows:

1. Grease, oil, chewing gum, paints, tar, lipstick, shoe polish, etc. should be removed with a clean cloth wetted with a volatile cleaner.

2. For stains such as chocolate, mildew and urine, use mild soap suds with a cloth dampened in lukewarm water.

3. Cold water is the best cleaner for blood and nausea.

4. Hot water should be used on stains produced by fruits, ice cream, wine and non-chocolate candies. CAUTION: IMPROPER CLEANING METHODS WILL CAUSE CERTAIN STAINS TO SET. If in doubt about the cleaning method to use, obtain the advice of a reputable dry cleaning establishment.

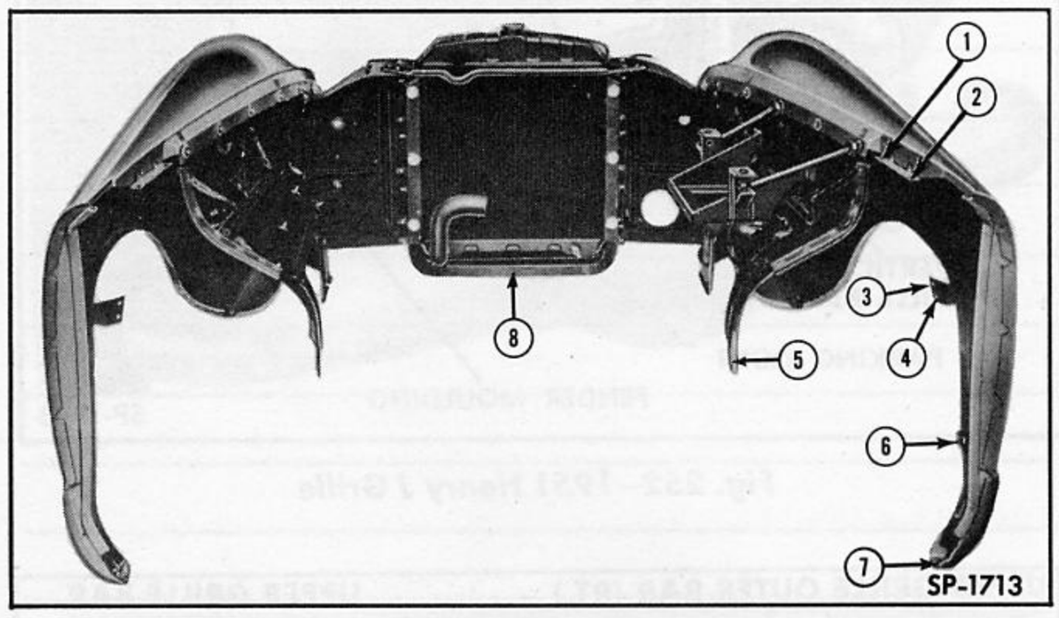

Fig. 249—Front End Sheet Metal and Radiator Assembly

FRONT END SHEET METAL

The front end sheet metal is attached to the body and the frame for easy removal of complete assemblies or individual parts.

In such operations as engine removal, it is desirable to remove the front end sheet metal as an assembly. To do this, remove hood, remove front bumper and supports from frame and drain cooling system. Disconnect radiator hoses at engine, headlamp wiring at junction block near hood latch, fresh air ducts at cowl (if so equipped) and battery. Remove battery. Remove bolts at locations indicated in Fig. 249 and lift off front end sheet metal and radiator assembly.

HOOD

The hood opens on spring loaded hinges attached to the body. The manually operated hood latch is mounted to the radiator shroud upper baffle. A safety catch and lock bolt is mounted on the hood. A moulding is attached to the front edge of the hood and serves as part of the grille.

a. Hood Latch Replacement

Remove the hood latch from the radiator shroud and the safety catch and lock bolt from the hood by removing their attaching bolts, nuts and washers (see Fig. 250). Install new latch safety catch. CAUTION: BE SURE THAT SAFETY CATCH ENGAGES HOOD LOCK PLATE PROPERLY WHEN HOOD LATCH IS RELEASED.

The hood latch is adjustable by means of slotted holes in both the latch and the radiator shroud to align the latch with the lock bolt. The hood lock bolt is also adjustable by turning the bolt in the plate to obtain proper height of the closed hood. Rubber bumpers at the front end of the hood also affect height of the hood.

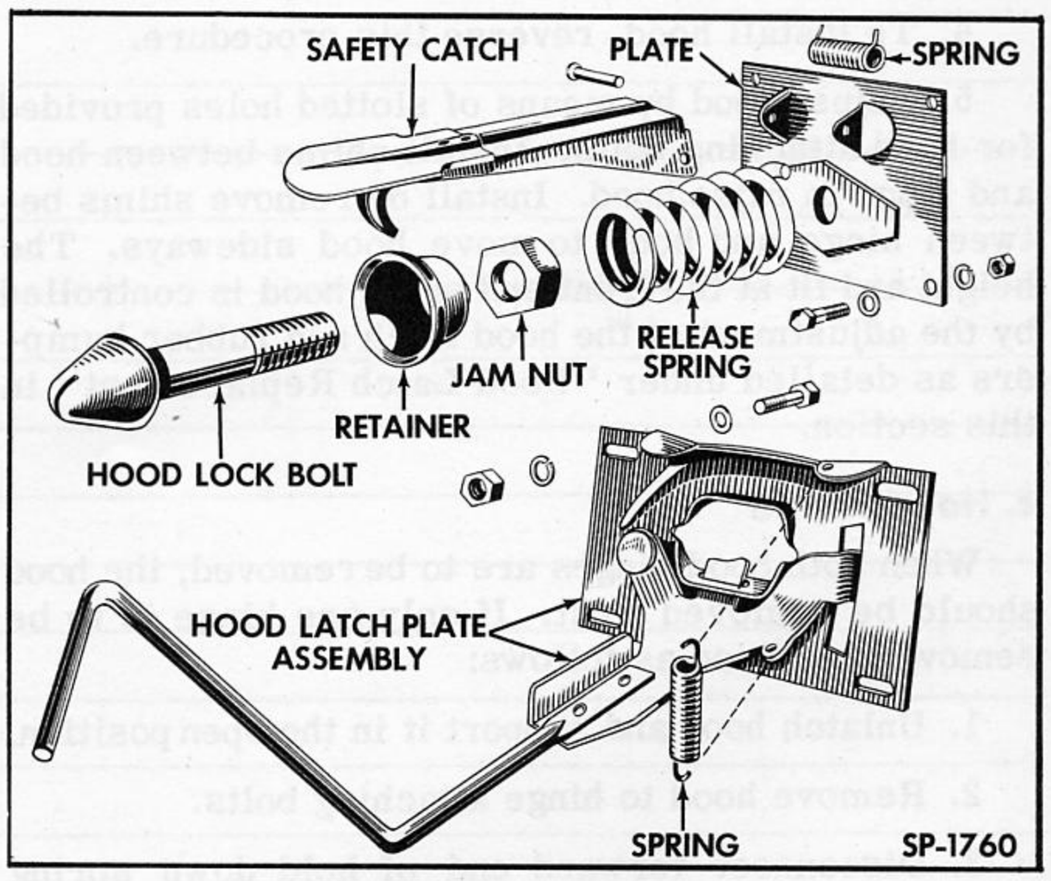

Fig. 250—Hood Latch Mechanism—Exploded View

b. Hood Replacement

The hood can be replaced as follows:

1. Raise hood.

2. Remove hood safety catch and lock bolt and hood ornament.

3. With a helper supporting the hood, remove the two attaching bolts A and the nut B shown in Fig. 251 from each side and remove the hood.

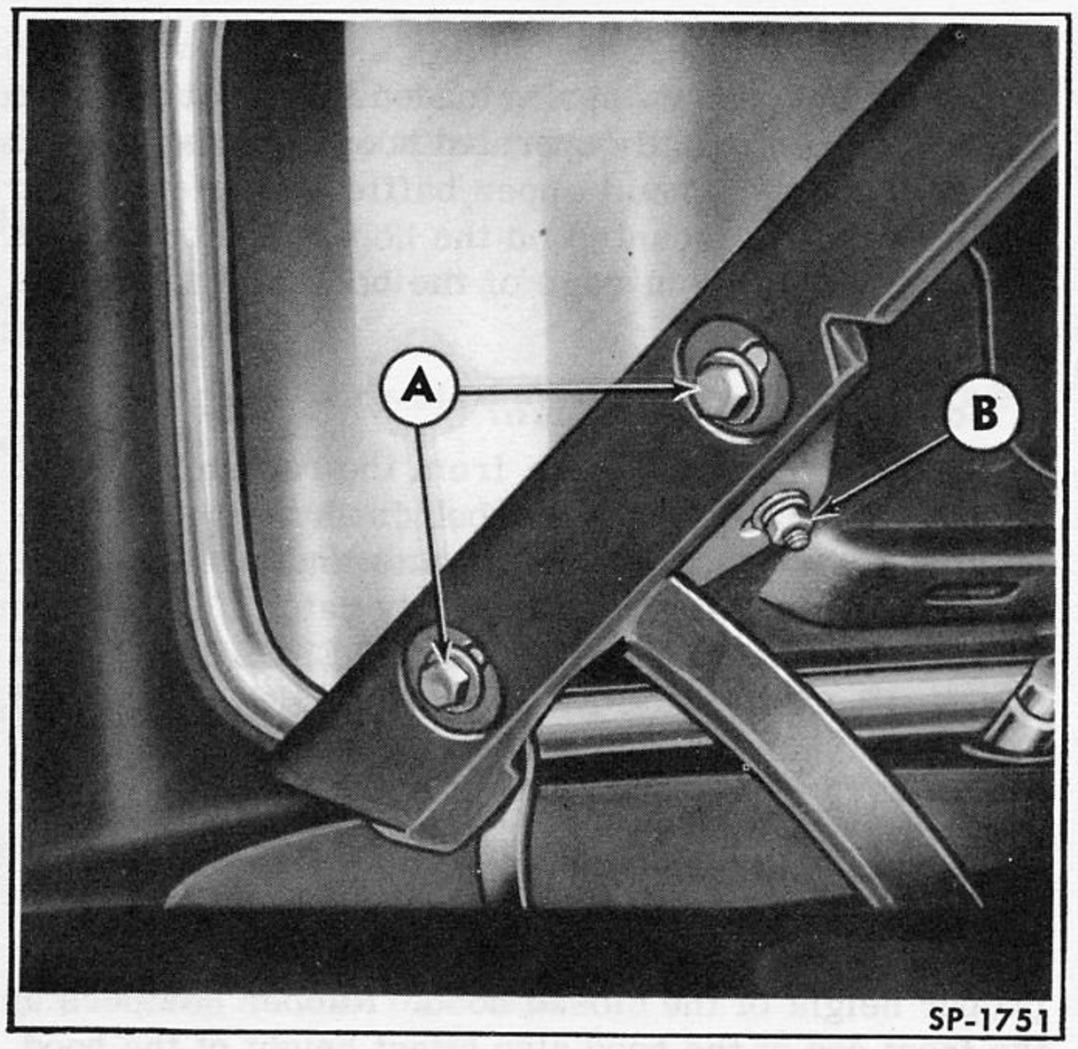

Fig. 251—Hood Hinge Installation

4. To install hood, reverse this procedure.

5. Adjust hood by means of slotted holes provided for hood attaching bolts. Install shims between hood and hinge to raise hood. Install or remove shims between hinge and body to move hood sideways. The height and fit at the front end of the hood is controlled by the adjustment of the hood latch and rubber bumpers as detailed under "Hood Latch Replacement" in this section.

c. Hood Hinge

When both hood hinges are to be removed, the hood should be removed first. If only one hinge is to be removed, proceed as follows:

1. Unlatch hood and support it in the open position.

2. Remove hood to hinge attaching bolts.

3. Disconnect forward end of hold down spring from hinge, using a suitable tool.

4. Remove two nuts and washers from inside body and one external bolt which attach hinge to body. Remove hinge.

5. To install, reverse this procedure. If necessary, use shims between hinge and body to adjust hood sideways.

FRONT FENDERS AND SPLASH SHIELDS

The front fenders are removed from the vehicle for replacement by disconnecting headlamp and removing attaching screws and bolts along forward and upper edges and at the cowl. On later models the grille must also be disconnected from its attachment at the fender.

The splash shields and radiator shroud can be removed by removing their attaching bolts and screws. If removing right splash shield, battery must be removed first. The left splash shield has a removable access cover for valve tappet adjustment.

GRILLE

Grilles used on the different models are shown in Fig. 252 and 253. The various parts of the grille are attached with screws and bolts for easy replacement. On 1951 models, the grille is easily removed as an assembly. Various grille parts are replaced after the grille assembly is removed. On 1952 and 1953

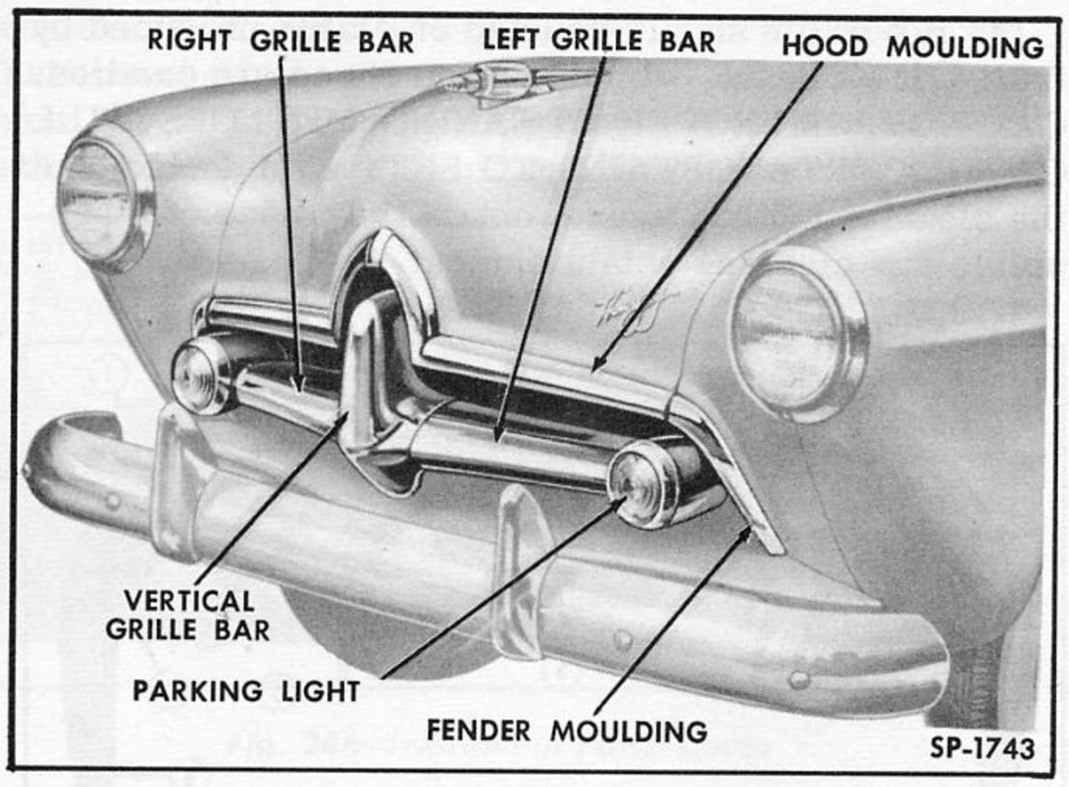

Fig. 252—1951 Henry J Grille

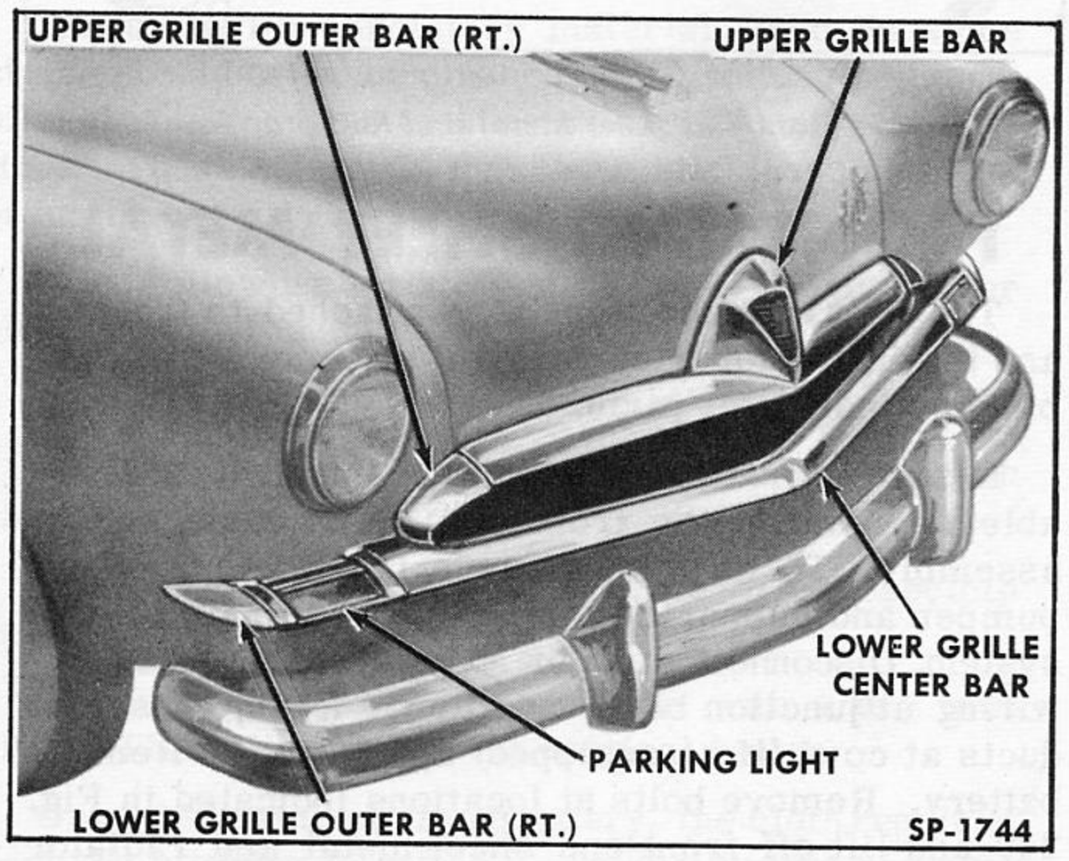

Fig. 253—1952 and 1953 Henry J Grille

models, the individual grille parts can be replaced without removing the complete assembly.

BUMPERS AND SUPPORTS

Front and rear bumpers are the one piece type mounted to heavy steel supports which bolt to the frame. Stone deflector panels are attached to the body with screws and extend between the body and bumpers just above the bumper supports on both front and rear bumpers.

SERVICE BULLETIN REFERENCE

HENRY J SHOP MANUAL

SERVICE BULLETIN REFERENCE